DECLARATION

No part of this publication may be reproduced,stored in a retrieval system,or transmitted in any form bu any means,electronic,mechanical photocoping,recording,or otherwise without prior permission of Acrel.All rights reserved.
This company reserve power or revision of product specification described in thismanual without notice.Before ordering,please consult local agent for the latest specification of product.

AISIKAI-ATS-SKQ1-PSG-24V1.0

Ⓒ AISIKAI ELECTRIC COPYRIGHT

wechat

contact

AiSIKAI®
POWER THE FUTURE

SKQ1 AUTOMATIC TRANSFER SWITCH
SELECTION GUIDE

JIANGSU AISIKAI ELECTRIC CO.,LTD

Tel:+86-514-83872777 83872888
Fax:+86-514-83872000
Free Service Telephone:400-828-8338
E-mail:aisikai@aisikai.cc
Factory Add:NO.5 Chuangye Road,Chenji Industrial Zone,Yizheng City,Jiangsu Province China

JIANGSU AISIKAI ELECTRIC CO.,LTD

SKQ1 SERIES CB CLASS ATS (MOTOR DRIVEN TYPE)

PRODUCT OVERVIEW

● SKQ1 series dual power automatic transfer switch is the second generation ATS. It is CB Class and its usage category is AC-33B non-frequently operable electrical transfer switch.ASKQ is suitable to be used in the 50/60Hz low voltage AC power distribution systems for the reliable transfer between two power supplies.

QUICK SELECTION TABLE

SK	Q1	—	63A	/	4P	/	M

- **SK** — Company Name: AISIKAI ELECTRIC
- **Q1** — Drive type of ATS: Q: CB Class Motor Driven Series
- **63A** — Rated working current (A): MCB Type: 6, 10, 16, 25, 32, 40, 50, 63; MCCB Type: 125, 250, 400, 630, 1000, 1250, 1600
- **4P** — No. of poles: 2P: 2Poles; 3P: 3Poles; 4P: 4Poles
- **M** — Function Code: M:End type(automatic switch to standby and automatic return to main); J:Basic type; NAX:Intelligent fire-fighting type

Design marking

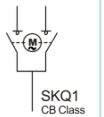

Model description 1 :

SKQ1-63A/4P/M:
1.Class CB motor driven dual power automatic transfer switch;
2.Consist of two miniature circuit breakers;
3. Rated working current 63A;
4. Molded case circuit breakers are 4 poles;
5.End type, automatic switch to standby and automatic return to main.

Model description 2:

SKQ1-400A/4P/J:
1.Class CB motor driven dual power automatic transfer switch;
2.Consist of two molded case circuit breakers;
3.Rated working current 400A;
4.Basic type, 2-position, No zero.

PERFORAMCE CHARACTERISTICS

- Reasonable in structure, small in volume, beautiful in appearance. Much safer and more reliable in power supply with the protective cover.
- Complete protection functions, provided with protection of short-circuit, overload and etc.
- Noise-free operation, energy saving and consumption reducing, convenient in installation, easy in operation, reliable and stable in performance.
- The interior adopts D type miniature circuit breaker .

NORMAL WORKING CONDITIONS AND INSTALLATION METHODS

Category	Requirements
Temperature	-5 to 40℃. The average value for 24 hours shall not exceed +35℃;
Humidity	The average humidity at +40℃ shall not exceed 50%; higher humidity is allowed at a lower temperature, for example, 90% at +25℃. Special measures should be taken for occasional; condensation due to temperature changes;
Altitude	Lower than 2000 meters and, if higher than 2000 meters, please use reduce product rated value for use
Vibration and gas	There shall be no strong vibration or shock and no hamful gases to corrode he metals and to damagethe insulation within the environment of its use
Surrounding material	There shall be no serious dust, conductive particles or explosive hazardous substances
Class of pollution	Class Ⅲ in accordance with GB/T14048.11
Installation category	Category III in accordance with GB/T14048.11

STRUCTURE INTRODUCTION (SKQ1 6A~63A)

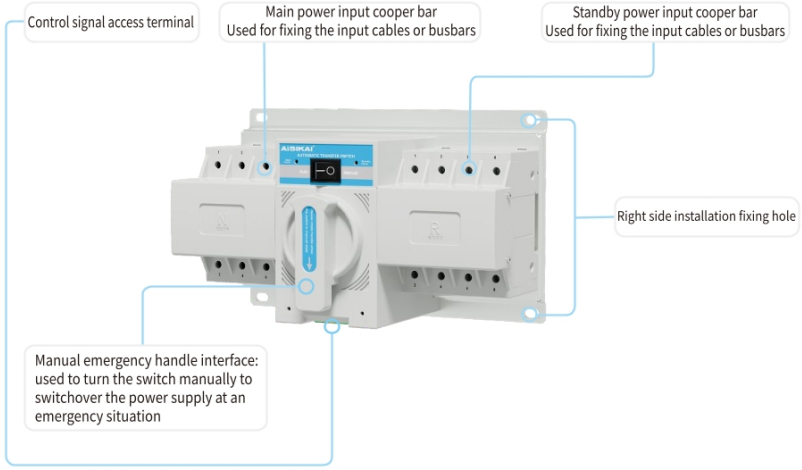

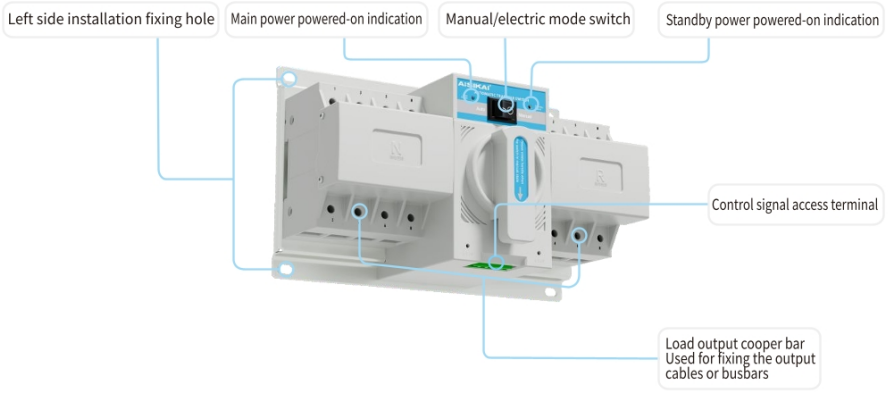

MAIN TECHNICAL PARAMETERS

Rated short-circuit breaking capacity	5KA
Rated short-circuit making capacity	5KA
Transfer time	≤3s
Control voltage of transfer switch	230V
Service life of transfer switch	Mechanical: 3000 times; Electrical: 1500 times
Rated insulation voltage of copper bar **Ui**	U=400V
Rated operating voltage of copper bar **Ue**	AC400V (2P switch is AC220V)
Rated operating current of copper bar **Ie**	10A、16A、20A、25A、32A、40A、63A

MAKING AND BREAKING CAPACITY

Usage category	Making and breaking test conditions					
AC-33iB	L/Ie	u/ue	cosΦ	Power-on time (s)	Cycle period (min)	Operating cycles
	6.0	1.05	0.5	0.05	⩽5	12

Note: The motor load under the non-frequent operation of AC-33iB may include the hybrid load of the motor and the resistance load.

OUTLINE DIMENSIONS DIAGRAM

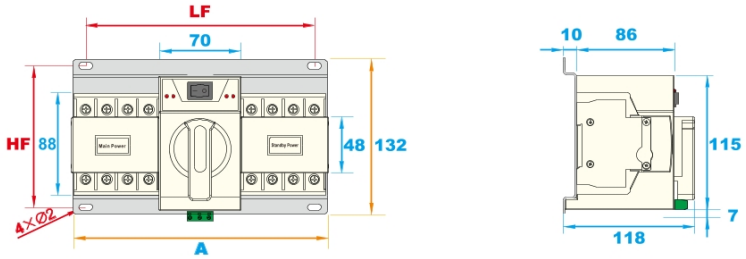

	LF	HF	A
4P	200	120	220
3P	164	120	184
2P	128	120	148

TYPICAL WIRING DIAGRAM

Primary wiring schematic diagram: M-type

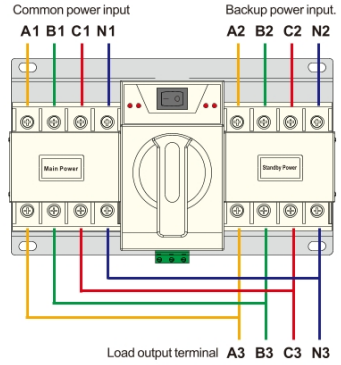

Secondary wiring schematic diagram: M-type(automatic switch to standby and automatic return to main)

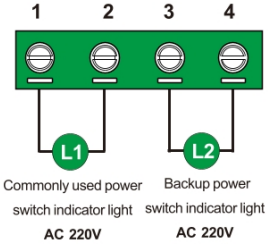

Note:

1. According to the actual needs of distribution line, first properly connect the main power and standby power input terminals. After confirming that the phase sequences of the two power supplies are consistent, connect the load outputs in parallel.
2. When needing manual operation, first set the button in Manual position, then turn the handle to transfer.

STRUCTURE INTRODUCTION (SKQ1-**J** Basic type 125A~**160**0A)

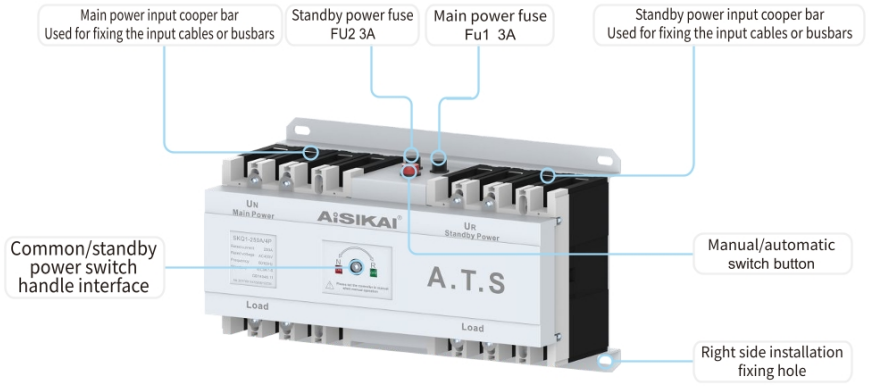

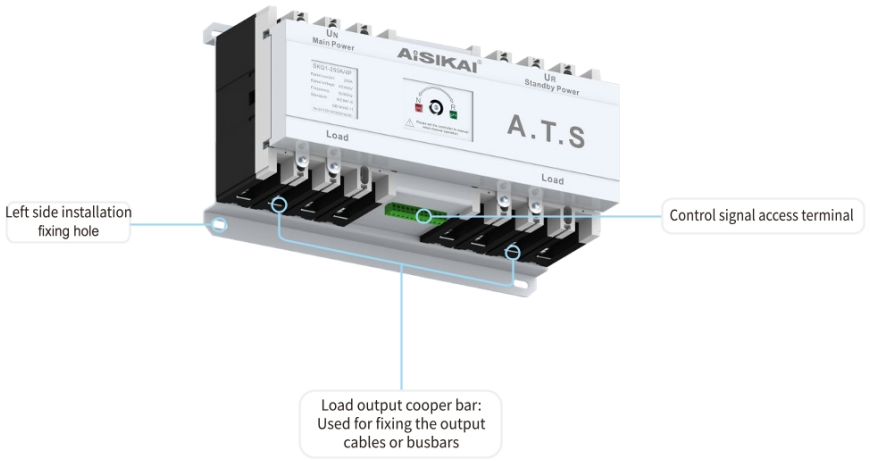

MAIN TECHNICAL PARAMETERS

		SKQ1-125	SKQ1-250	SKQ1-400	SKQ1-630	SKQ1-800	SKQ1-1600
Usage category		AC-33iB					
Rated current **Ie**		63A,80A,100A,125A	140A,160A,200A,250A	400A	400A,500A,630A	630A,720A,800A	1000A,1250A,1600A
Rated working voltage **Ue**		AC400V					
Rated insulation voltage **Ui**		690V					
Rated short time withstand voltage **Icw**		10kA	10kA	12.6kA	50kA	50kA	50kA
Rated short-circuit making capacity **Icm**		17kA	17kA	25.2kA	105kA	105kA	105kA
Service life	Mechanical	10000		5000			
	Electrical	5000		2500			
Pole numbers		3P,4P					
Test operating cycles(seconds/time)		15s					
Transfer time		1~99s(delay)					

Outline and installation dimensions

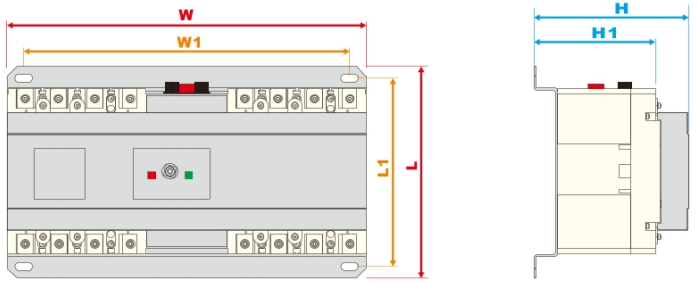

Specification / Dimension	W	L	H1	H	W1	L1
125A/3P	289	207	87	122	255	184
125A/4P	317	210	87	122	278	184
250A/3P	330	215	106	139	296	193
250A/4P	365	215	104.5	139	332	193
400A/3P	459	306	125	190	408	284
400A/4P	507	306	125	190	456	284
630A/3P	529	313.5	132	199.5	472	291
630A/4P	587	313.5	132	199.5	530	291
800A/3P	606	336	134.5	202	555	313
800A/4P	675	336	134.5	202	623	313

INSTALLATION DIMENSIONS

SKQ1-1250A-3P

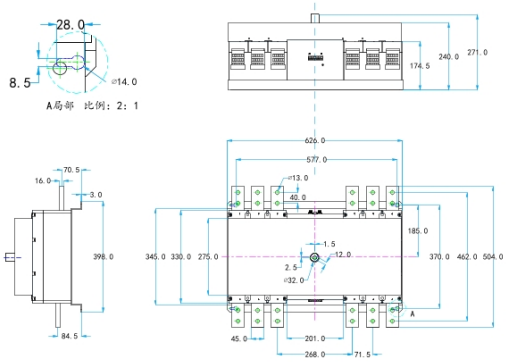

SKQ1-1250A-4P

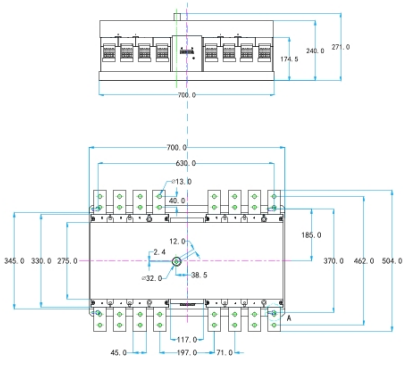

SKQ1-1600A-3P

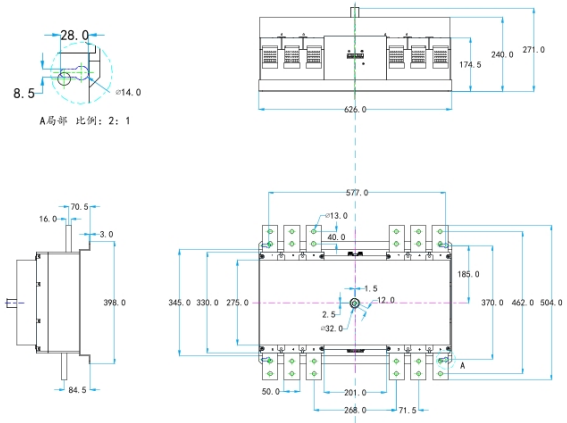

SKQ1-1600A-4P

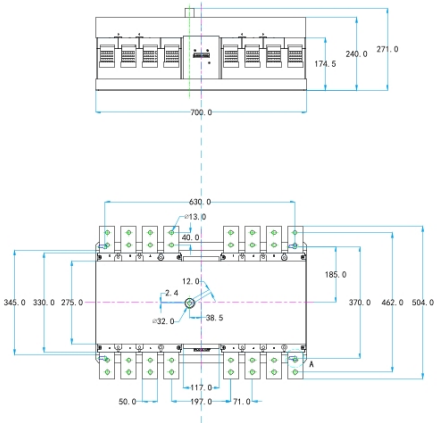

WIRING DIAGRAM

Primary wiring schematic diagram

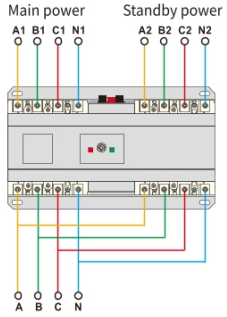

Secondary wiring schematic diagram: M-type(automatic switch to standby and automatic return to main)

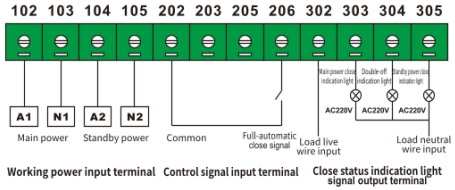

Secondary wiring schematic diagram: J-Basic type (External signal control)

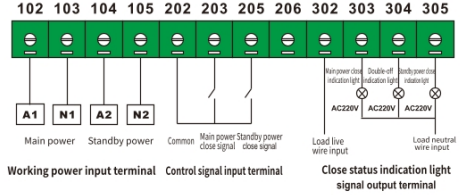

STRUCTURE INTRODUCTION(**SKQ1-NAX** Intelligent fire-fighting type**125A~1600A**)

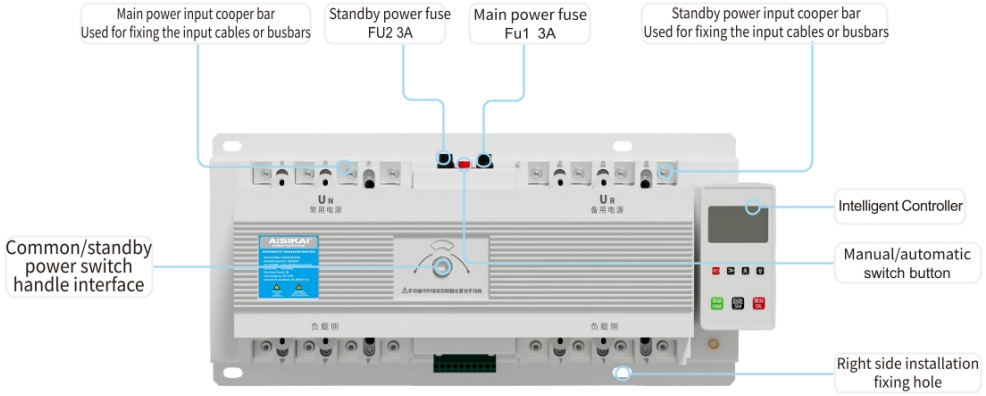

The SKQ1-NAX intelligent fire-fighting dual power automatic transfer switch has comprehensive detection and protection functions. It uses a high-speed single-chip embedded microprocessor as the main control chip, which can monitor the power supply status in real time and ensure the reliable operation of the power supply system.

1. Equipped with both mechanical and electrical interlock protection functions to prevent two circuit breakers from closing simultaneously;

2. Features six control operation methods: "Manual Control," "Auto-recovery," "Normal Power Supply," "Standby Power Supply," "Power-off Restore," and "Auto-recovery Disallowed."

3.Provides under-voltage, over-voltage, and phase-loss protection to prevent faulty power supplies from feeding the load.

4. Includes alarm or indication functions for power failures, circuit breaker tripping, and other faults.

5. Prevents secondary reclosing: that is, in case of a short circuit or overload on the load side, or after the circuit breaker automatically trips (opens), it cannot automatically detect itself.

6. Allows adjustable setting of operational parameters (under-voltage value, over-voltage value, trip delay time) with dual-phase voltage display on LCD; features a full Chinese menu for easy user inquiry in real-time.

7. Equipped with a fire interface; in emergency situations, by simply connecting to the fire control DC24V (control voltage selected by the user), this controller will immediately output a control contact to quickly cut off the relevant circuit.

Outline Dimensions And Installation Method

○ The product

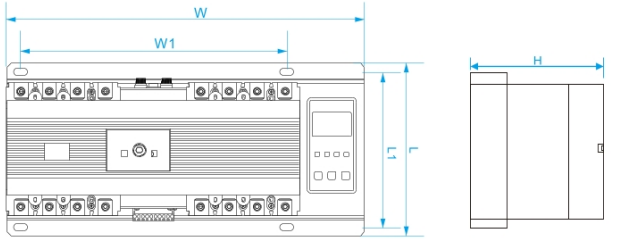

Split, integrated.

Model (**Intelligent**)	Dimensions (**W** X **L** X **H**)			**Installation Size** (**W** X **L** X **H**)	
	W	**L**	**H**	**W1**	**L1**
100/3P/4P	**420X240X125**			**385X220**	
250/3P/4P	**470X240X145**			**435X220**	
400/3P/4P	**615X330X195**			**555X300**	
630/3P/4P	**740X330X200**			**685X300**	
800/3P/4P	**790X330X210**			**735X300**	
1600/3P/4P	**800X390X210**			**755X370**	

Intelligent controller function

The intelligent controller inputs via keyboard position and displays through LED. It can synchronously detect the three phases of both the normal (N) and standby (R) power supplies, alternately displaying the status of each phase voltage. If any phase is missing, has lost voltage, under-voltage, or over-voltage—defined as below 80% of the rated working voltage for under-voltage, and above 120% for over-voltage—the microcomputer processes these detection results and issues corresponding commands. The processing results can be displayed on an LCD, providing a user-friendly human-machine interface. When the controller detects a fire command (DC24V power supply), it issues instructions to open the double switches.When the alarm system is activated(Press the ⛁ key, Simultaneously, the LCD display shows "alarm" indicating that the alarm system is activated. When an abnormality is detected in the fire command or the backup power supply, a beeping sound will be emitted; the alarm and the alarm system can be manually turned off (Press the ⛁ key, The word "Alarm" on the LCD has disappeared).

Self-recovering, the main power supply (N) automatically switches to the backup power supply (R) in case of abnormalities. Once the main power supply (N) is restored, it automatically reverts back. If both power supplies fail simultaneously when the alarm system is activated, the microcomputer will issue an alarm prompt. The system prioritizes returning to normal operation once the power is restored.

Work Mode:
- Self-recovery (R) type
- Self-throwing and non-self-recovery type
- Self-restoring type (F)
- Applicable to power grids and electrical networks
- Applicable to power grid and power grid
- Applicable Power Grid and Power Generation
- Built-in power generation and fire protection function DC24V

Note: Self-protection is a feature of this series. When the power supply is abnormal, it has the characteristic of protection first and then delay.

■ Self-healing power grid - Power grid

The system is initially set to automatically use the primary (manual, dual-divided) power supply by default. When there's an anomaly in the power supply (such as overvoltage, undervoltage, loss of voltage, or phase failure in any phase), the indicators NA, NB, NC, PA, PB, and PC on the controller's LCD will disappear accordingly. If the primary power supply (N) malfunctions for 3 seconds, it automatically switches to the dual-divided state and, after a delay, shifts to the backup power supply (R). The delay time can be set between 0-30 seconds, with the factory setting at 3 seconds. Once the primary power supply returns to normal, it automatically switches back to the primary power supply (N). If the backup power supply (R) fails, the controller will emit a "beep-beep" alarm sound. The alarm can also be manually turned off ⛁ LCD上The "alarm" sign disappeared, indicating that the alarm system is turned off.When the ⛁ "alarm" button is pressed, the word "alarm" is displayed and a "beep" sound is emitted to indicate that the alarm system has been turned off.

■ Self-healing grid—Power system

Upon initial power-up, the default automatic or commonly used (manual, split) power supply is activated. When there's an anomaly in the power supply (any phase overvoltage, undervoltage, voltage loss, or phase break), the indicators NA, NB, NC, PA, PB, PC on the controller's LCD will disappear accordingly. If a common power source (N) experiences an anomaly for 3 seconds, it will automatically switch to the split state and then, after a delay, switch to the standby power supply (R). The delay time can be set from 0 to 30 seconds, with the factory setting at 3 seconds. Once the common power source returns to normal, it cannot automatically revert to using the common power supply (N); manual intervention is required to switch back. If the standby power supply (R) encounters an issue, the controller will emit a "beep" alarm sound.The alarm can also be manually turned off⛁ LCD上The disappearance of the "alarm" word indicates that the alarm system is off. Press the subtract key ⛁ The "alarm" sign appears, and a "beep" sound is emitted, indicating that the alarm system has been activated.

■ Self-healing grid - power generation

The controller monitors both the normal power source (N) and the generator power source ®. When an anomaly occurs in the normal power source (N), the system sends a generation command to the generator set via a normally closed contact and an unloading command through a normally open contact, thereby activating the generator set. Once the grid voltage (N) returns to normal, the control system, after a delay, automatically switches back to supplying power from the normal power source (N), and the generator set must be manually shut down.

Instructions for LCD Display and Controller Settings

"Setup key"、"Shift key "◑、"Add key "⛁、"reduce keys" ⛁、The initial password is 8888. The internal parameters have been preset by the manufacturer and do not need to be changed by the user.

" 0.3S " delay time、 " FFF0 "Autonomous non-regenerative，" SF01" Double time.

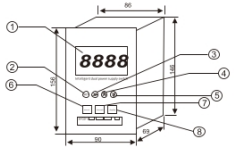

1、LCD screen
2、Setting key
3、Right arrow key
4、Number Key
5、Digital subtraction/alarm
6、Manual key
7、Auto key
8、Double bond

*Controller installation hole size：86×146mm

Note: "LCD display automatic self-recovery" is abbreviated as "self-recovery", and "automatic non-self-recovery" is abbreviated as "non-self-recovery". "SF01" cannot be modified.

LCD screen display content



1、" Commonly used " translates to "Indicates that the switch is in the normally closed position".
2、" Spare" Indicates that the switch is in a standby closed position.
3、" NA " Display the common A-phase voltage for detection;
4、" NB " Commonly used B-phase voltage for display detection;
5、" NC " Display the common A-phase voltage for detection;
6、" RA " Display check standby phase A voltage;
7、" RB " Display the backup phase B voltage;
8、" RC " Display and check the standby C-phase voltage;
9、" Setting " The controller has entered the setup mode;
10、" Automatic " The controller is in automatic operation mode, automatically monitoringThe controller is in automatic operation mode, automatically monitoring phase voltages for any a automatically monitoring the normal and standby phase voltages for any anomalies, and switching the position of the status switch according to preset conditions.
11、" Manual "Indicates that the controller is in manual mode, and pressing the manual button switch can toggle once;
12、" Double score " The controller has detected the manual button press to switch to the dual split position;
13、" Self-throwing and self-recovery " The controller is set to operate in an auto-recovery mode;
14、" Self-inflicted and irreversible " The controller operates in a self-throwing, non-self-restoring mode;
15、"Alarm" The controller alarm system is now active;
16、" N-R"Flash for commonly used priority;
17、" R-N"Flashing indicates standby priority;
18、Press " ◑ " Display the corresponding voltage value.



Intelligent Controller Operation Instructions:

Entry Method and Key Instructions: Press the "SET" key to enter the settings mode when the controller is operating, as shown in Figure 1，Press the " ◑ "Enter the next parameter display or right shift
Press the" ⛁"key to increment the current data.，Press the" ⛁ " to decrease the current data.

Controller Setup Operation Instructions

Press" SET "

co dE Setting	The password to enter the setup mode is the default "8888", and the current number is flashing, indicating it can be modified. Press the" ⛁ " key to enter addition，Press the " ⛁ " key to decrease.
Press" ◑ " 03s Setting	The delay setting for switching from normal to standby mode is set to 3 seconds by default. The current number blinks to indicate it can be modified. Press the" ⛁ " key to enter addition，Press the" ⛁ " key to decrease.
Press" ◑ " 03s Setting	The standby to active delay setting, default 3S, the current number blinking is editable. Press the" ⛁"key to enter addition，Press the" ⛁ " key to decrease.
Press" ◑ " Enter the next settings interface SF 08 Setting	Double split time setting, the current number is flashing and can be modified. Press the" ⛁ " key to enter addition，Press the" ⛁ " key to decrease.
Press" ◑ " Enter the next settings interface FF F1 Setting	Self-recovery setting, non-self-recovery setting, " 1" Self-throwing and self-recovery, "0" Self-inflicted and irreversible，The current number is flashing and can be changed. Press the" ⛁ " key to enter addition，Press the"⛁" key to decrease.
Press" ◑ " Enter the next settings interface Fd 0 Setting	Grid-to-grid, grid-to-generation setup, " 0 " "Grid-to-grid", "1" The current digital display of the power grid is flickering and can be modified. Press the" ⛁ " key to enter addition，Press the"⛁" key to decrease.
Press" ◑ " Enter the next settings interface FC 0 Setting	Priority for common use, priority for standby settings, "0" Commonly used first, "1" Standby priority，The current number is flashing as editable. Press the" ⛁ " key to enter addition，Press the"⛁" key to decrease.
Press" ◑ " Enter the next settings interface H270U Setting	Overpressure setting 2700，The current number is flashing and can be modified. Press the" ⛁ " key to enter addition，Press the"⛁" key to decrease.
Press" ◑ " Enter the next settings interface U170U Setting	Undervoltage setting 1700，The current number is flashing and can be modified. Press the" ⛁ " key to enter addition，Press the"⛁" key to decrease.
Press" ◑ " Enter the next settings interface NA 22 0U Setting	Display the NA voltage value.
Press" ◑ " Enter the next settings interface NB 22 0U Setting	Display the NB voltage value.
Press" ◑ " Enter the next settings interface NC 22 0U Setting	Display the NC voltage value.
Press" ◑ " Enter the next settings interface RA 22 0U Setting	Display the RA voltage value.
Press" ◑ " Enter the next settings interface RB 22 0U Setting	Display the RB voltage value.
Press" ◑ " Enter the next settings interface RC 22 0U Setting	Display the RC voltage value.

Press the"◑" Settings completed, save and exit settings.