DECLARATION
All rights reserved. Without the written permission of our company, any paragraph or section of this manual must not be excerpted, copied or reproduced, disseminated in any form, otherwise all consequences will be borne by the offender. Our company reserves all legal rights.
Our company reserve the right to change the specifications of the products described in this manual without prior notice. Before ordering, please contact your local distributor for the latest specifications of this product.

AISIKAI-2024OSG-ASKW1-V1.3

© AISIKAI COPYRIGHT

wechat contact

AiSIKAI®

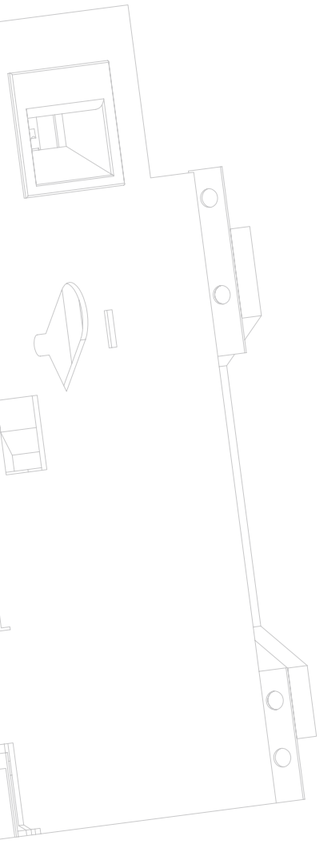

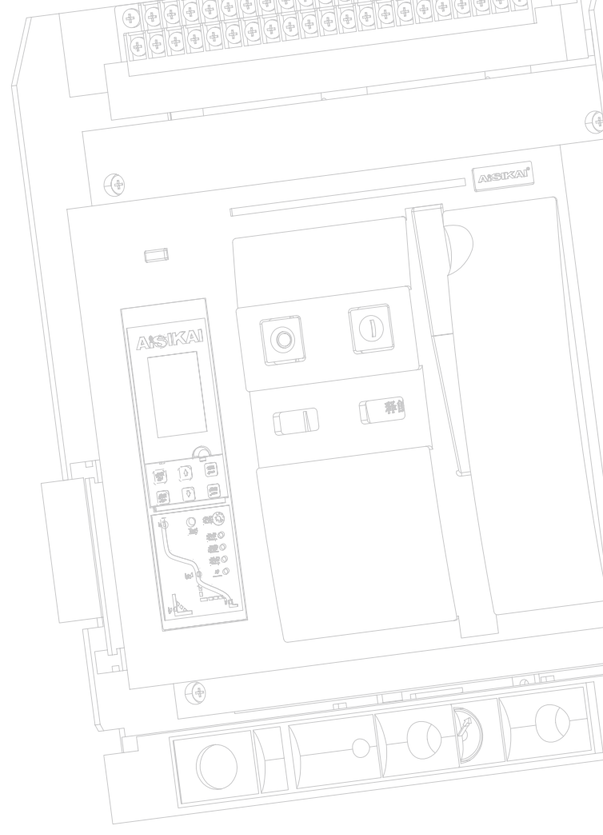

ASKW1 UNIVERSAL CIRCUIT BREAKER

AIR CIRCUIT BREAKER
SELECTION GUIDE

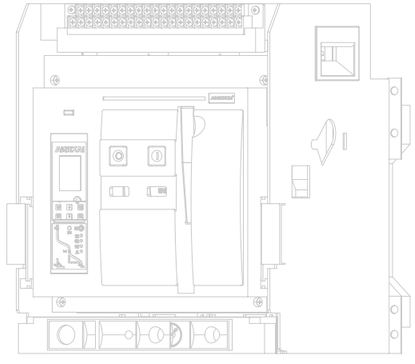

JIANGSU AISIKAI ELECTRIC CO.,LTD

Tel:+86-514-83872777 83872888
Fax:+86-514-83872000
Free Service Telephone:400-828-8338
E-mail:aisikai@aisikai.cc
Factory Add:NO.5 Chuangye Road,Chenji Industrial Zone,Yizheng City,Jiangsu Province China

JIANGSU AISIKAI ELECTRIC CO.,LTD

PRODUCTSCONTENTS

03 PRODUCT OVERVIEW

05 MODEL SELECTION TABLE

06 ASKW1 INTELLIGENT UNIVERSAL AIR CIRCUIT BREAKER OVERVIEW

09 MAIN TECHNICAL PARAMETERS AND PERFORMANCE

12 INTELLIGENT CONTROLLER INTRODUCTION AND SETTING METHODS

15 ACCESSORIES

17 SECONDARY CIRCUIT WIRING DIAGRAM

23 OUTLINE AND INSTALLATION DIMENSIONS

33 ORDERING SPECIFICATIONS

COMPANYPROFILE

Since established in 2007, AISIKAI has been committed to the manufacture, research, development and marketing of the high-quality high and low voltage electric switches. Our product lines cover level Ⅰ,Ⅱ,Ⅲ power distribution fields. We are awarded as the National High Tech Enterprise, Double-Soft Certified Enterprise (i.e., software product certified and software enterprise certified), Little Giant Science and Technology Enterprise of Jiangsu Province, and Contract-keeping and Trustworthy Enterprise. We have invention patents, utility model patents and appearance patents. All of AISIKAI products have China Compulsory Certification (CCC) and China Quality Certification (CQC). From 2014, we have been recognized as Yangzhou City Engineering Technology Center and National Adopting International Standard Enterprise.

AISIKAI products have CE certification and IEC CB certification. We have passed the ISO9001 Quality Management System and ISO14001 Environment Management System, ISO45001 Occupational Health Management System, and SGS Global Qualified Supplier Authentication.

QUALITY, SERVICE, REPUTATION, INNOVATION is AISIKAI's unchanging company principle. We're always eager to make progress to offer reliable products and impeccable services. With your support and trust, AISIKAI will thrive and work towards a brighter future.





UNIVERSAL CIRCUIT BREAKERS

AiSIKAI®



ACB

INTELLIGENT UNIVERSAL AIR CIRCUIT BREAKER

INTELLIGENT UNIVERSAL AIR CIRCUIT BREAKER

Excellent Technology, Superior Performance

ASKW1 & ASKW2 & ASKW3 series intelligent air circuit breakers are the AISIKAI's key products in the low voltage distribution field. Our ACB cover a wide range from 200A to 6300A, and are equipped with AISIKAI self-developed multi-functional intelligent LCD controllers, which use English menu in Windows structure, making the human-machine interface user-friendly and easy to use.

Over the years, we have been specializing in the design, R&D and the professional manufacturing of the low voltage electric products. Oriented by the satisfaction and expectations of customers, we ensure product safety and reliability, and continuously improve product performance. We use advanced automated assembly lines to ensure the timely delivery to customers. We observe strict quality standards to ensure that each product is qualified.



APPLICATIONS



Civil Commercial Industrial



STANDARDS

GB14048.2 IEC60947-2













Wide Range of Applications

ASKW1 & ASKW2 & ASKW3 series intelligent air circuit breakers comply with the IEC/GB standards and have passed the China Compulsory Certification. ACB are suitable for the various power grid systems of AC 400V and AC 690V.

Comprehensive Protection Functions

ASKW1 & ASKW2 & ASKW3 series intelligent air circuit breakers are equipped with intelligent LCD controller, providing numerous setting functions like long delay protection, short delay (inverse time limit/definite time limit) protection, instantaneous protection, grounding protection, load monitoring, MCR & HSISC protection, regional chain protection, etc.

Complete Measurement Functions

The new intelligent LCD controllers provide four phases current measurement, grounding current measurement, thermal capacity measurement, three phases line voltage measurement, average line voltage measurement, three phases voltage measurement, power frequency measurement, etc.

Intelligent Communication Function

For users who need system integration, ASKW1 & ASKW2 & ASKW3 series intelligent circuit breakers can be assembled with communication type LCD controllers, which use MODUBUS-RUT standard communication protocol, realizing functions like uploading circuit breaker operating states and electric parameters, viewing operating events and maintenance information.

Easy Installation

ACB can be used in matching with the general standard cabinets. Drawout type or fixed type can be selected for installation. The direction of output copper bars can be selected in horizontal or vertical. Lengthened copper bars are optional in special occasions.

High-grade Electrical Parameters

ASKW1 & ASKW2 & ASKW3 series intelligent air circuit breakers are made of high quality materials, contributing to the superior electrical performance of AISIKAI products, especially the comprehensive performance.

ASKW1 SERIES INTELLIGENT UNIVERSAL AIR CIRCUIT BREAKER SELECTION TABLE

Intelligent controller
M: digital display for currents; adjust by buttons; 3 sections protection and grounding fault protection (M type controller is the default configuration) Note: " M " may be omitted
H: digital display for currents; adjust by buttons; communication function; 3 sections protection and grounding fault protection

Optional accessories
Under-voltage tripper
Voltage loss delay tripper (optional from 0s to 5s when ordering; cannot be adjusted afterwards)
Under-voltage delay tripper (optional from 0s to 20s when ordering; cannot be adjusted afterwards)
Vertical inlet and outlet busbars
Breaking position key lock: 1 lock 1 key
3 locks 2 keys
5 locks 3 keys
Mechanical interlocking: horizontal cable interlocking of 2 units or 3 units of ACB vertical link interlocking 2 units or 3 units of ACB
External current transformer of neutral line N
Door interlocking
Drawout type circuit breaker phase partition
DC power module

Product code	Frame rating current (A)	Installation method
Intelligent universal air circuit breaker	W： 2000 / 2500 / 2500U	C： Drawout type
	3200 / 4000 / 6300	G： Fixed(can be omitted)

ASK	W	1	—	2000	/	4P	/	M	/	C	/	Optional accessories	/	1250A	/	50Hz

Company	Design serial	Number of poles	Rated operational current (A)	Frequency
AISIKAI ELECTRIC	Standard type	3 poles (can be omitted)	630、800、1000、1250、1600、2000 (W1 type-2000A frame)	50Hz(can be omitted)
		4 poles	2000、2500、2900、3200 (W1 type-3200A frame)	60Hz
		4 poles (connect to external neutral line current transformer)	3200、3600、4000 (W1 type-4000A frame)	
			4000、5000、6300 (W1 type-6300A frame)	

Design marking	Model definition 1:	Model definition 2:
ASKW	ASKW1-2000 / 3P / G / 1250A 1. Standard universal air circuit breaker; 2. 2000A frame, 3 poles, fixed type; 3. M type LCD controller, no accessories (implicit); 4. Rated current 1250A	ASKW1-2000 / 4P / H / C / 2000A 1. Standard universal air circuit breaker; 2. 2000A frame, residential power distribution special type, 4 poles, drawout type 3. H type liquid crystal controller(implicit), no accessories(implicit) 4. Rated current 2000A

QUALIFICATION DOCUMENTS


CCC


CCC


CCC


CCC


CCC


CE


ISO

ASKW1 SERIES INTELLIGENT UNIVERSAL AIR CIRCUIT BREAKER

OVERVIEW



- ASKW1 series intelligent universal air circuit breakers (ACB for abbreviation) are suitable for the distribution network of AC 50Hz/60Hz, rated voltage 400V and 690V, rated current 630A-6300A, distributing electric power and protecting circuits and power supply equipment against faults as overload, under-voltage, short-circuit, single-phase grounding, etc. ACB have intelligent protection functions and isolation function. The selective protections of ACB have high accuracy, which can improve the reliability of power supply and avoid unnecessary power outages. ACB are equipped with open communication interfaces for four remote functions, meeting the requirements of centralized control of the automation system.

CLASSIFICATION



- **Classified by installation method**
  Fixed type; Drawout type
- **Classified by operation method**
  Electric operation; manual operation (for inspection and maintenance)
- **Classified by poles number**
  3 poles; 4 poles
- **Classified by wiring method**
  Upper inlet and lower outlet; lower inlet and upper outlet; horizontal inlet and outlet; horizontal extended inlet and outlet
- **Classified by intelligent over-current controller**
  H type(communication function); M type (normal type)

APPLICATIONS


Civil　Commercial　Industrial

STANDARDS

GB14048.2 IEC60947-2

Category	Requirement
Altitude	Lower than 2000 meters.
Operational temperature	Between -5℃ and +40℃. The average value in 24 hours does not exceed +35℃.
Pollution level	Level 3
Installation level	The installation level is Ⅲ.
Operational humidity	The relative humidity at +40℃ shall not exceed 50%. Higher relative humidity is allowed at lower temperature. The average maximum relative humidity is 90% in the most humid month and this month has the average minimum temperature of +25 ℃. The condensation that occurs on the surface of the product due to temperature changes should also be taken into consideration.
Installation conditions	Use environment should be without strong vibration and shock. The magnetic field near the installation site should not exceed 5 times the geomagnetic field in any direction.
Installation method	Install horizontally.
Wiring method	Wiring reversely is acceptable.

STRUCTURE INTRODUCTION-FIXED TYPE

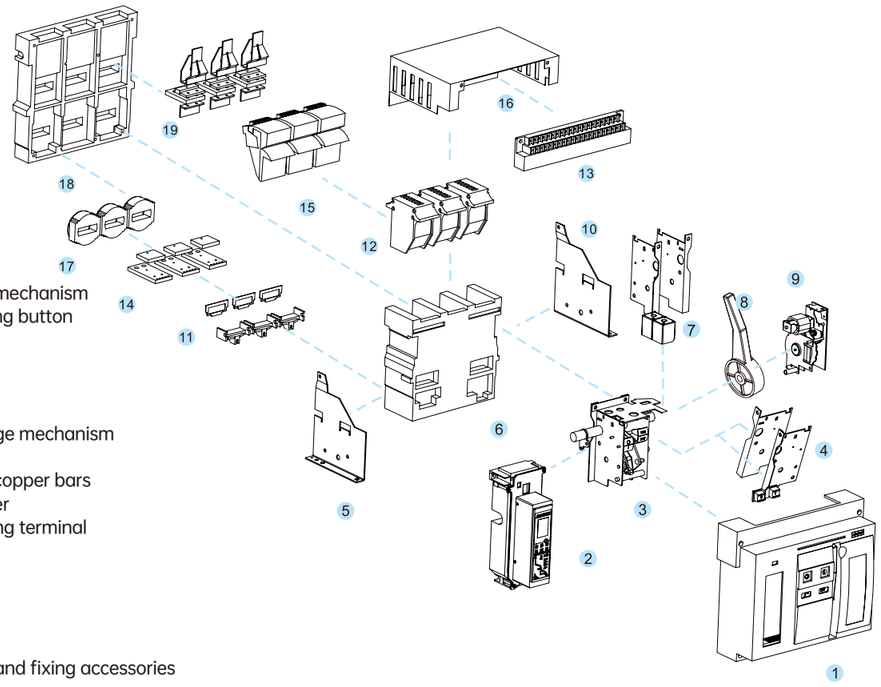

1. Panel
2. Controller
3. Mechanical operating mechanism
4. Breaking button/ making button
5. Left fixing rack
6. Pedestal
7. Shunt tripper
8. Energy storage handle
9. Electrical energy-storage mechanism
10. Right fixing rack
11. Accessories for fixing copper bars
12. Arc extinguishing cover
13. Secondary circuit wiring terminal
14. Lower fixed contact
15. Moving contacts
16. Top cover
17. Transformer
18. Base
19. Upper fixed contacts and fixing accessories

Structure overview	Contact system	Operating mechanism	Under-voltage tripper	Shunt (Opening) tripper	Energy Releasing (Closing) Electromagnet	Electric energy-storage mechanism
ACB is in modular structure with compact structure and small volume. It has the characteristics of three-dimensional separation. The contact system is enclosed between two insulating plates with separation structure. Each contact is separated and forms a small cell. Intelligent controllers, manual and electric operating mechanisms are in the front, forming cells independent of each other. Under-voltage tripper, shunt tripper, closing electromag-net and auxiliary contacts are installed on the upper part of ACB. If one of the units is broken, this whole unit can be removed and replaced. ACB buttons and operations require only a small space. The "test" or "disconnected" position has good safety.	The moving contact system of each phase is installed in a small insulated cell, above which is the arc extinguishing chamber. The contact system completes the closing and breaking actions through the connection between the link rod and the mechanism spindle. The moving contact of each phase is composed of contacts arranged in parallel, reducing the electric repulsion and improving the electric stability performance. Contacts are made of new arc-resistant materials and the contact resistance is stable. After breaking short-circuit current, the contacts will not overheat and not have excessive temperature rise.	ACB have two modes of operation: manual and electric. The ACB closing process is driven by the energy stored in spring (have pre-stored energy). The closing speed is independent of the speed of electric operation or manual operation. ACB use cams to compress a set of springs to realize the purpose of energy storage. The intelligent tripping function is also equipped. ACB have three operating positions (energy storage, closed, open). The operating mechanism is composed of intelligent tripping mechanism, energy storage motor, operating handle, etc, forming separate units from each other, which is easy to replace and repair.	Under-voltage trippers have three types: Undervoltage trippers are divided into undervoltage instantaneous trippers, undervoltage time-delay and undervoltage (zero-voltage) time-delay. Using the toggle switch on the under-voltage delay device, user can adjust the delay time. The setting values of the delay time are 0.3s, 0.5s, 1s, 3s and 5S. In the 1/2 delay time, when the power supply voltage is restored to 85%Ue or above, the circuit breaker does not break; When the power supply voltage is 35%~70%Ue, the circuit breaker can break ; When the supply voltage ≤35%Ue, the circuit breaker cannot close .	The shunt tripper can be operated remotely to break the circuit breaker. Within the range of 70%~110% of the rated control power supply voltage (Us), the shunt tripper can make the circuit breaker break.	After the motor energy storage is finished, the closing electromagnet can release the energy storage spring force of the operating mechanism in an instant, closing the circuit breaker fast. Within the range of 85%-110% of the rated control power supply voltage (Us), the closing electromagnet can make the circuit breaker close.	The circuit breaker is operated by an electric energy-storage mechanism, which can store energy either manually or electrically.

STRUCTURE INTRODUCTION-DRAWOUT TYPE

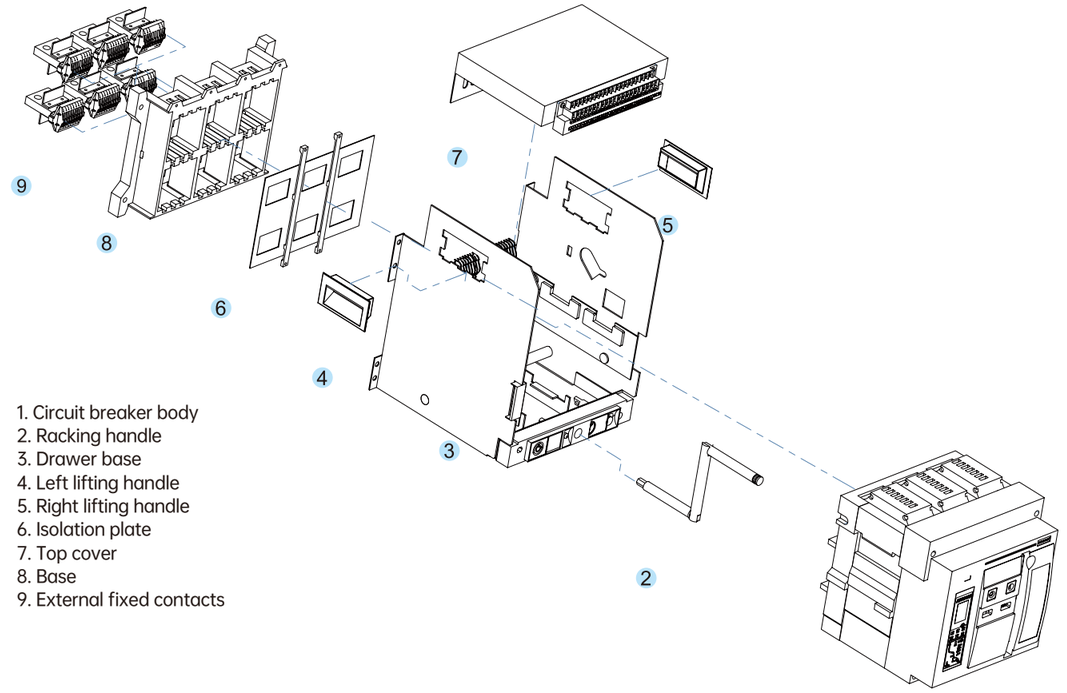

1. Circuit breaker body
2. Racking handle
3. Drawer base
4. Left lifting handle
5. Right lifting handle
6. Isolation plate
7. Top cover
8. Base
9. External fixed contacts

Structure overview	Connection mode	Working locations	Mechanical interlocking
Drawout type circuit breaker consists of circuit breaker body and cradle. There are rails on both sides of the cradle, and there are movable guide plates on the rails. The circuit breaker body is placed on the left and right guide plates.	The drawout type circuit breaker is connected to the main circuit by inserting the busbars on the circuit breaker body into the bridge contacts on the cradle.	Crank the racking handle on the lower part of the cradle to make the drawout type circuit breaker into three working position (there is position indication by the cranking handle). "Connected" position: both the main circuit and the secondary circuit are connected. "Test" position: The main circuit is disconnected and separated by insulating separator. Only the secondary circuit is connected, and the necessary action tests can be carried out. "Disconnected" position: the main circuit and the secondary circuit are both disconnected. In the "Disconnected" position, the cranking handle must be removed before removing the circuit breaker body.	Drawer circuit breakers have mechanical interlocking, making the circuit breaker can only be closed in "Connected" or "Test" position. The circuit breaker cannot be closed in a position between "Connected" and "Test".

TECHNICAL PARAMETER AND PERFORMANCE

Form 1 Circuit breaker basic parameter

Model	Frame rating current Inm A	Rated current In A	Rated impulse withstand voltage Uimp kV	Rated Ue V	Rated limit short-circuit breaking capacity Icu kA o-co		Rated service short-circuit breaking capacity Ics kA o-co-co		Rated short-time withstand current Icw KA(1s) delay 0.4s o-co		Power loss (In) W	
					400V	660/690V	400V	660/690V	400V	660/690V	Fixed	Drawout
ASKW1-2000	2000	630	12	AC50Hz /60Hz 400V 690V	85	65	65	65	65	65	40	80
		800									60	130
		1000									90	205
		1250									90	205
		1600									140	310
		2000									170	310
ASKW1-3200	3200	2000			100	70	80	70	80	70	170	400
		2500									260	510
		2900									320	650
		3200									420	760
ASKW1-4000	4000	3200			100	70	80	70	80	70	430	780
		3600									440	790
		4000									450	800
ASKW1-6300	6300	4000			120	85	100	85	100	85	1225	
		5000									1250	
		6300									1625	

1. Arc distance is zero. 2. In this form, the breaking capacities of upper inlet and lower inlet are same.

Form 2 The derating of circuit breaker at different temperature

Allowed continuous operating current \ Ambient temperature		+40℃	+45℃	+50℃	+55℃	+60℃	+65℃
Applicable standards GB/T 14048.2 IEC/EN60947-2	ASKW1-2000	630	630	630	630	610	610
		800	800	800	800	800	800
		1000	1000	1000	1000	1000	1000
		1250	1250	1250	1200	1150	1150
		1600	1600	1500	1500	1300	1300
		2000	1900	1900	1800	1700	1650
	ASKW1-3200	2000	2000	2000	2000	2000	2000
		2500	2400	2300	2200	2200	2200
	ASKW1-4000	3200	3000	3000	2800	2800	2600
		4000	3800	3600	3400	3200	3200
	ASKW1-6300	4000	4000	4000	4000	4000	4000
		5000	5000	5000	4800	4800	4800
		6300	6000	5600	5400	5200	5100

Form 3 The derating of circuit breaker at different altitude

When the altitude is higher than 2000m, the insulation characteristic, cooling characteristic, pressure etc. in atmosphere change. Revise the performance according to the form below:

a.Voltage

Altitude(m)	Power frequency withstand voltage(V)	Insulation voltage(V)	Rated operational voltage(V)
2000	2200	1000	690
3000	1955	800	580
4000	1760	700	500
5000	1600	600	400

b.Current

Altitude(m)	2000	2500	3000	3500	4000	4500	5000
Rated operational current(Ie)	Ie	0.93Ie	0.88Ie	0.83Ie	0.78Ie	0.73Ie	Must contact the manufacturer

INTELLIGENT OVER-CURRENT CONTROLLER PROJECTION CHARACTERISTICS

Figure 1 Basic function
(long delay, short delay and instantaneous protection)

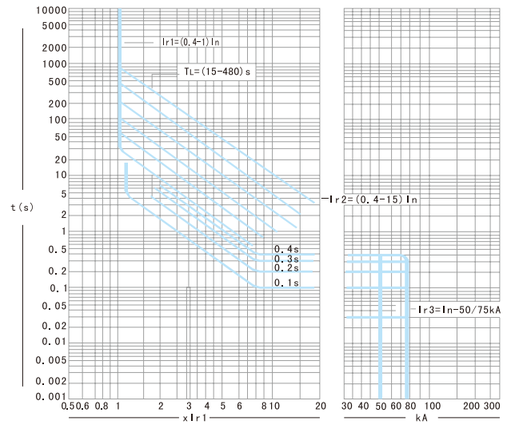

Figure 2 Grounding fault protection

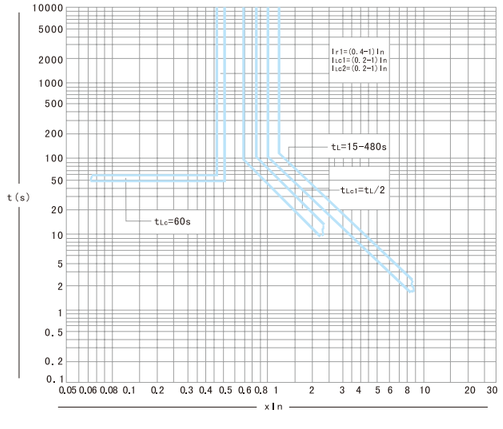

Figure 3 Load monitor and control
(1 load limit and 1 load coincidence protection characteristic)

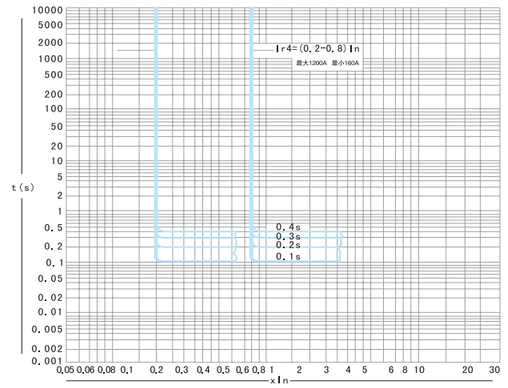

Figure 4 Load monitor and control
(double loads limit protection characteristic)

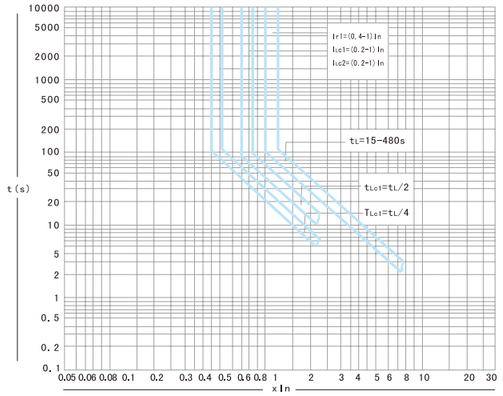

Form 4 Tripper current setting value Ir and tolerance

Model		Short delay		Instantaneous		Grounding fault	
Ir1	Tolerance	Ir2	Tolerance	Ir3	Tolerance	Ir4	Tolerance
(0.4~1)In	±10%	(0.4~15)In	±10%	10In~50kA	±15%	(0.2~0.8)In(max1200A)	±10%

Note：when having 3-section protection at the same time, the setting value cannot be overlapped, and it should be Ir1<Ir2<Ir3.

Form 5 Long delay over-current protection inverse-time action characteristic

Current	Action time						Tolerance
1.05Ir1	＞2h do not action						±15%
13Ir1	＜1h action						
15Ir1	15s	30s	60s	120s	240s	480s	
20Ir1	8.4s	16.9s	33.7s	67.5s	135s	270s	

Note: The time of 2.0Ir1 is calculated as I2T=(1.5Ir1)2tL. tL is the action time when it's 1.5Ir1. tL is set by user.

Form 6 Short delay current protection characteristic

Model	Action characteristic	Definite time(s)					Tolerance
I≥Ir2 I≤8Ir1	Inverse time	Setting timeT=(8Ir1)² t2/I²					±15%
I≥Ir2 I≤8Ir1	Definite time	Setting timet2	0.1	0.2	0.3	0.4	
		可返回时间	0.06	0.14	0.23	0.35	

Grounding fault protection characteristic is short delay definite time, see the definite time action time and return time in the short delay current protection characteristic. The grounding fault factory default setting value is “OFF”.

Form 7 If user does not have special requirement when ordering, manufacturer will set the intelligent controller according to the below form.

Long delay	Setting value	Ir1	In
	Delay	t1(15 Ir 1)	15s
Short delay	Setting value	Ir2	8In
	Delay	t2	0.4s
Instantaneous	Setting value	Ir3	12In
Grounding fault	Setting value	Ir4	0.4In
	Delay	t4	OFF(Only indicate, do not break)

Note: In this form, Ir1 is long delay protection setting current, Ir2 is short delay protection setting current, Ir3 is instantaneous protection setting current, Ir4 is grounding protection setting current.

Form 8 Circuit breaker operating performance

Number of operation cycles per hour	Shell current	Number of cycles of operation powered on	Shell current	Number of cycles of operation not powered on
20 times	2000A	6000 times	2000A	10000 times
	2500A		2500A	10000 times
	2500A(U)		2500A(U)	10000 times
	3200A		3200A	10000 times
	4000A		4000A	10000 times
	6300A		6300A	10000 times

Form 9 Operational voltage of shunt tripper, under voltage tripper, electric operating tripper, Energy release(closing) electromagnet, intelligent controller

Category	Rated voltage	AC 50Hz(V)	DC (V)
Shunt tripper	Us	220、380	110、220
Under voltage tripper	Ue	220、380	-
Electric operating mechanism	Us	220、380	110、220
Energy release(closing) electromagnet	Us	220、380	110、220
Intelligent controller	Us	220、380	110、220

Note: The reliable action voltage range of shunt tripper is 70%~110%Us. The reliable action voltage range of energy release(closing) electromagnet and electric operating mechanism is 85%~110% Us.

Form 10 Circuit breaker under voltage tripper performance

Category		Under voltage delay tripper	Zero voltage delay tripper	Under voltage instantaneous tripper
Tripper action time		Delay 0,1,2,3,5,10,15,20s	Delay 0,1,2,3,5s	Instantaneous
Tripper action voltage	35%–70%Ue	Circuit breaker can break		
	⩽35%Ue	Circuit breaker cannot close		
	⩾85%Ue	Circuit breaker can close reliably		

If power supply voltage recovers to 85%Ue within 1/2 of delay time, circuit breaker does not break

Form 11 The making and breaking capacity of auxiliary contact under abnormal condition

Usage category	Making			Breaking			Number of On-Off operation cycles and operation frequency		
	I / Ie	U / Ue	cosΦorT0.95	I / Ie	U / Ue	cosΦorT0.95	Number of operation cycles	Number of operation cycles per minute	Power on time(s)
AC-15	10	1.1	0.3	10	1.1	0.3	10	6(Or as same as the operation frequency of the main circuit)	0.05
DC-13	1.1	1.1	6Pe	1.1	1.1	6Pe			

The conventional thermal current of auxiliary contact is 6A.
The auxiliary contact form: 4 sets of switching contacts (standard).
Note: When Pe≥50W, the upper limit of T0.95 =6Pe≤300ms.

Form 12 The connecting and breaking capacity of auxiliary contact under normal condition

Usage category	Making			Breaking		
	I / Ie	U / Ue	cosΦorT0.95	I / Ie	U / Ue	cosΦorT0.95
AC-15	10	1	0.3	1	1	0.3
DC-13	1	1	6Pe	1	1	6Pe

Breaking position key lock

The circuit breakers have “breaking position key lock” accessory(provide as requested by the customer). It can lock the circuit breaker in the breaking position, at this time, neither the close button nor release energy (closing) electromagnetic can close the circuit breaker.

Introduction of Intelligent Controller

Use	Series	Remarks	Functional distinction		
			M series		H series
General industrial use	H	M type and H type use LCD display and buttons setting	Effective value protection Three-section protection + grounding leakage protection Load current bar graph indication Multiple alarm functions Test function Fault memory function Self-diagnosis	Ammeter, Power Meter More protection functions, five features are optional Load Monitoring ▲ Contact wear and mechanical life indication ▲ Event memory, Programming interface MCR on-off and over-limit trip function Voltmeter ▲	Communication interface: provide standard RS485 interface multi-protocol data transmission functions (internal integrated ModBus communication protocol) Alarm signal output function ▲
	M				

Detailed Table of Intelligent Controller Functions

Functions of M-type Over-current Controller	Functions of H-type Over-current Controller
● a. Ammeter function: display the operating current of each phase and the grounding leakage current. Display the maximum phase current in normal state. Can also display the current value or time value of setting, testing and fault. ● b. Voltmeter function: display each line voltage. Display the maximum value in normal state . ▲ ● c. Load monitoring function: Set 2 setting values, ILc1 setting range (0.2-1) In, ILc2 setting range (0.2-1) In. ILc1 delay characteristic is inverse-time limit characteristic and its time setting value is 1/2 of delay setting value. ILC2 delay characteristic has two kinds. The first is the inverse-time limit characteristic and its time setting value is 1/4 of the long delay setting value; the second is the definite-time limit characteristic and its delay time is 60s. The former delay function is used to break subordinate non-important load when the current is close to the overload setting value. The latter delay function is used: when the current exceeds the ILC1 setting value, it time-delay breaks the subordinate non-important load, making the current decrease, thus protecting the power supply of the main circuit and important load circuit; when the current decreases to ILc2, after a certain delay a signal is issued to reconnect the subordinate part of the circuit, restoring the power supply of the entire system. User can choose one of the above two monitoring protections. The monitoring characteristics are shown in Fig. 3 and Fig. 4.▲ ● d. Setting function: The controller parameters can be adjusted by using 4 buttons: set, up, down and enter. ● e. Test function: All kinds of protection characteristics of the controller can be checked by using buttons: set, up, down, enter, etc. ● f. Remote monitoring and diagnostic functions (1) The controller has the function of fault self-diagnosis function. When the computer fails, it can issue the error "E" display or alarm, and restart the computer at the same time. The circuit breaker can also be disconnected when required by the user. (2) When the regional ambient temperature reaches 85℃, it can issue alarm and disconnect the circuit breaker at a low current(required by user). (3) Intelligent controller has signals such as overload, grounding, short-circuit, load monitoring, pre-alarm, tripping indication (OCR) outputting through contacts or optocouplers, making it convenient for remote control. Contact capacity is DC28V 3A, AC125V 3A. ● g. When the regional ambient temperature reaches 85℃, it can issue alarm and disconnect the circuit breaker at a low current(required by user). ▲ (1) MCR on-off protection is mainly used when the circuit is closed in the fault state (controller power-on moment), the controller has the function of breaking the circuit breaker with low short-circuit current. The factory setting is 10 kA with error of ±20% and the setting current can be set according to user's requirements. (2) The controller has this function: in case of very large short-circuit current, controller will directly issue the tripping signal without the host chip processing the signal.	● In addition to all the functions of M-type, H-type also has serial communication interface, which, through special equipment, can match printer, language system or PC. Many parameters, such as the No. of circuit breaker, ON/OFF state, setting values of trippers, operating current, operating voltage, fault current, action time and fault state, can be transmitted and displayed or printed in forms of texts, graphics, etc. The remote measurement, remote adjustment, remote control and remote communication can be achieved, which are suitable for the network systems. (1) Communication interface hardware support: central processor 16-bit microprocessor, clock frequency 25MHz, communication baud rate up to 1MHz, port compliance with EIA RS485 protocol, support duplex, half-duplex mode, use cables of dual-core 8-pair type, use shielded wires in serious interference occasions. (2) Data transmission mode support: support serial synchronous and serial asynchronous; support 8-bit and 9-bit data transmission mode; support parity check; parallel communication can be achieved if necessary. (3) The communication interface protocol is divided into three layers: application layer, link layer and physical layer. Each layer use its dedicated protocol. (4) The function of communication interface: used mainly to realizes the four remote functions required by low-voltage distribution system, namely, remote control, remote adjustment, remote measurement and remote communication.

Note: ▲ mark indicates optional function.

Functions of H-type Over-current Controller

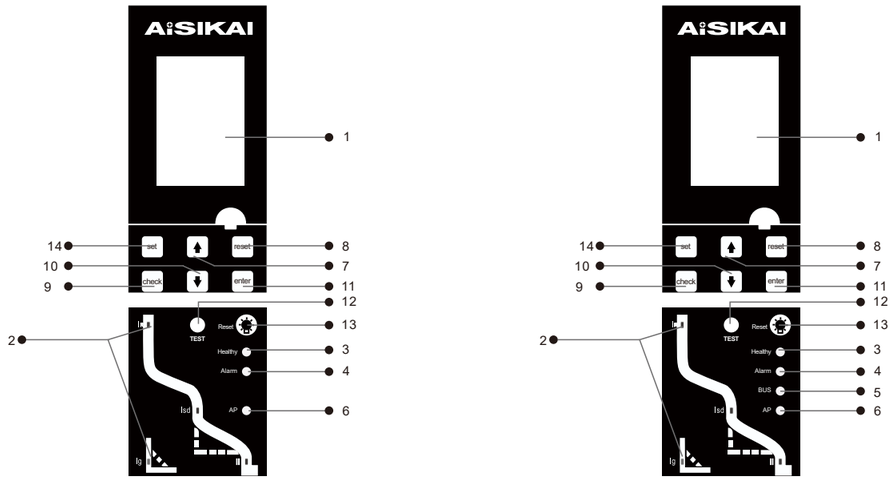

M type controller **H type controller**

1、LCD display screen

2、Curve LED: Red LED indicators are hidden in the curve. When a fault occurs, the corresponding LED will flash, indicating the fault type. When setting the protection parameters, the corresponding LED will be constantly lit, indicating the current item under setting.

3、“Working” LED: The green LED always flashes as long as the controller is powered on and in normal working condition.

4、"Fault/Alarm" LED: During normal operation, the LED is not lit; during the fault tripping, the red LED flashes rapidly; in the event of an alarm, the red LED is constantly lit.

5、"Communication" LED: During the communication, the LED flashes; when there’s no communication, the LED is not lit.

6、"AP" LED: advanced protection indicator(In the event of fault tripping due to phase loss, over-voltage, voltage unbalance, under-frequency, over-frequency, reverse power, etc., the “AP” LED is lit if alarm only no tripping.)

7、“Up”button: Move menu content upward in the currently used level, or increase the selected parameter.

8、“Back”button: Exit the currently used level to go to the upper level menu, or cancel selecting the current parameter

9、“Check”button: Function button 2, used for the cycle switching between “System parameter setting menu” and “History and maintenance menu”. In password inputting interface, this button works as “Right” button.

10、“Check”button: Function button 2, used for the cycle switching between “System parameter setting menu” and “History and maintenance menu”. In password inputting interface, this button works as “Right” button.

11、“Enter”button: Go to the next level menu pointed to by the current item, or select the current parameter, or save the modifications made.

12、“Test”button: Once pressed, the tripper trips one time, used for testing whether the mechanical mating is normal.

13、“Reset”button: After fault, the LCD screen shows fault. After troubleshooting, you need to press this button to reset the display.

14、“Set” button: Function button , used for the cycle switching between “Measurement menu” and “Protection parameter setting menu”. In password inputting interface, this button works as “Left” button.

Controller Menu Setting Methods

There are 4 function menus(Measurement menu, System parameters setting menu, Protection parameters menu, History records and maintenance menu) and 1 default interface.

M / H type intelligent controller

Default interface

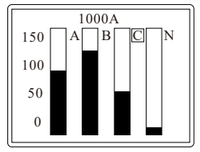

- The controller displays the default interface when powered on;
- When there is no other function is running, the controller displays the bar graph of all phases currents.
- If no button is pressed in 5 minutes, then the square cursor will automatically indicate the maximum phase ;
- In other interface except from the pop-up fault interface, if no button is pressed in 30 minutes, it will automatically return to the default interface.

Measurement menu: Press the “set”button to enter the “Measurement menu”

Current	I
Voltage	U
Frequency	F
Power	P
Electricity	E

- Press the “back” button to jump to default interface;
- In other interface except from the fault interface, , press the “set” button to jump to “Measure menu”;
- If there is no operation in 5 minutes, it will automatically return to the default interface;

History and maintenance menu: Press the “check” button twice to enter “History and maintenance menu”

Current alarm
Operating times
Contact wear
Product information
Tripping record

Alarm record
Position change record

- Press the “back” button to jump to default interface;
- In other interface except from the fault interface, press the “set” button to jump to “Measure menu”;
- If there is no operation in 5 minutes, it will automatically return to the default interface;

Protection parameter setting menu: Press the “set” button twice to enter “Protection parameter setting menu”

Current protection
Load monitoring
Voltage protection
Other protection

- Press the “back” button to jump to default interface;
- In other interface except from the fault interface, , press the “set” button to jump to “Measure menu”;
- If there is no operation in 5 minutes, it will automatically return to the default interface;

System parameter setting menu: Press the “ check” button to enter “Protection parameter setting menu”

Clock setting
Meter setting
Test & lock
Communication setting
I/O setting

- Press the “back” button to jump to default interface;
- In other interface except from the fault interface, , press the “set” button to jump to “Measure menu”;
- If there is no operation in 5 minutes, it will automatically return to the default interface;

ACCESSORIES-STANDARD

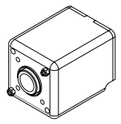
Shunt (opening) tripper

Shunt (opening) tripper

There are 4 function menus(Measurement menu, System parameters setting menu, Protection parameters menu, History records and maintenance menu) and 1 default interface.

Action characteristic

Rated control power voltage Ue(V)	AC230 AC400	DC110 DC220
Action voltage	(0.7~1.1) Us	
Power consumption	56VA	250W
Breaking time	50±10(ms)	

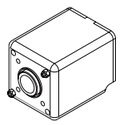
Energy release (Making) electromagnetic

Energy release (Making) electromagnetic

After the motor finishes energy storage, when the closing electromagnetic is powered on, the energy-storing spring force in the operating mechanism is released instantly, making the circuit breaker close quickly.

Action characteristic

Rated control power voltage Ue(V)	AC230 AC400	DC110 DC220
Action voltage	(0.85~1.1) Us	
Power consumption	56VA	250W
Closing time	50±10(ms)	

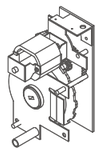
Electric operating mechanism

Electric operating mechanism

Having motorized energy storage function and automatic energy re-storage function after the circuit breaker is closed, it ensures the circuit breaker can be closed immediately after breaking. Manual energy pre-storage is also available.

Action characteristic

Rated control power voltage Ue(V)	AC230 AC400	DC110 DC220
Action voltage	(0.85~1.1) Us	
Power consumption	250VA/350VA	200W
Energy storing time	<4s	
Operating frequency	At most 3 times per minute	

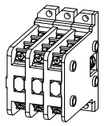
Auxiliary switches

Auxiliary switches(contacts)

The standard form of auxiliary switches is 4 open 4 closed combined contacts. 4 open 4 closed separate contacts.

Technical parameters

Rated voltage (V)		Rated thermal current ith(A)	Rated control capacity
AC	230	10	300VA
	400	6	100VA
DC	220	0.5	60W

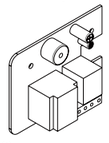
Closing coil protection circuit board

Closing coil protection circuit board

Protection method: After the fist closing failure, disconnect the closing coil power supply, then close again; After 3 times closing failure, disconnect the closing coil power supply, preventing the closing coil from burning out as a result of being always powered on.

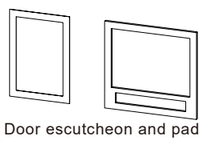
Door escutcheon and pad

Door escutcheon and pad

Mount on the door of power distribution cabinet room for sealing. The protection level achieves IP40 (the protection level is IP20 when circuit breaker is installed alone).

Self-actuate under-voltage tripper

When under-voltage tripper is not powered on, neither electric nor manual can make circuit breaker close;
Under-voltage trippers have 3 types: undervoltage instantaneous trippers, undervoltage time-delay trippers and loss-of-voltage (zero-voltage) time delay;
loss-of-voltage (zero-voltage) time delay can be set to 0, 1, 2, 3, 5 seconds when ordering, cannot be adjusted afterwards;
Under-voltage delay time can be set to 0, 1, 2, 3, 5, 10, 20 seconds when ordering, cannot be adjusted afterwards.

Action characteristic

Rated operational voltage Ue(V)	AC230 AC400
Action voltage	(0.35~0.7)Ue
Reliable closing voltage	(0.85~1.1)Ue
Reliable non-closing voltage	≤0.35Ue
Power consumption	20VA

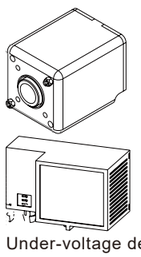
Under-voltage delay tripper

PRODUCT ACCESSORIES-OPTIONAL

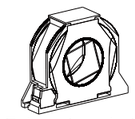
External neutral line transformer

External N (neutral) line transformer

When using ASKW1 3 poles circuit breaker in TN-S power distribution system, connect external neutral line N current transformer for grounding fault protection. The maximum distance from the transformer installation location to the circuit breaker is 2m.
Grounding fault protection signal uses the vector sum of three phases current and N phase current.
The protection characteristic is definite-time protection.

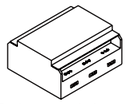
Relay module

Relay module

When using H type controller with ASKW1 circuit breaker, the optional special relay module can be used to expand the 3A relay to 5A, making it convenient for user to connect to various load equipment.

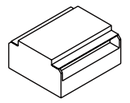
Power module

Power module

Special power for the relay module, transforming the external AC220V control power to DC24V.


Open/Close button locking cover

Open/Close button locking cover

Can be used to lock the manual ON/OFF button, used in ATMT system.


Key lock

Key lock

Key lock can lock the Open button of the circuit breaker at the pressed down position, and after the user turn the key, then the breaker cannot close.
One unit of circuit breaker is equipped with separate lock and one or two keys.
Three units of circuit breakers are equipped with three identical locks and two identical keys.
Note: When removing the key from the universal air circuit breaker with key lock, you must first press and hold the Open button and turn the key counterclockwise, then pull out the key.

Mechanical interlocking device

Mechanical interlocking of steel cable

Can realize the interlocking of two 3-pole or 4-pole circuit breakers installed horizontally or vertically
a. When the steel cable is bent, there should be sufficient transition arc at the bend (generally greater than 120mm) to ensure the flexible movement of the steel cable.
b. Check the steel cables and make sure there is enough lubricant in the cables to ensure the flexible movement of the cables.
c. The maximum distance between two interlocked circuit breakers is 2 m.

Anti-misplug device for cradle

Only the circuit breaker body, which matches the rated current on the sign, can be plugged into the corresponding cradle. The body cannot be inserted if the rated current does not match.

Linkage rod interlocking

The interlocking mechanism is installed on the right plate of the circuit breaker. Vertical-placed circuit breakers use linkage rod interlocking (Fig. 8); parallel-placed circuit breakers use steel cable interlock (Fig. 9). When one of the circuit breakers is in the closed state, then the others can not close. The interlocking mechanism is installed by the user.
Fig. 8 shows 3 stacked circuit breakers with linkage rod interlocking. For the interlocking of 2 circuit breakers, it's only need to remove the circuit breaker on the top.

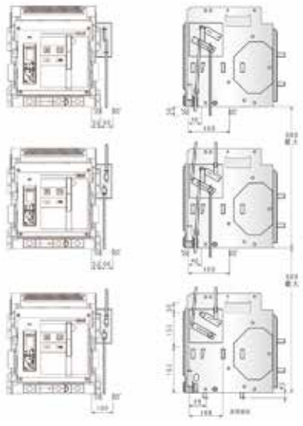
Fig. 8 Vertical-placed circuit breakers interlocking

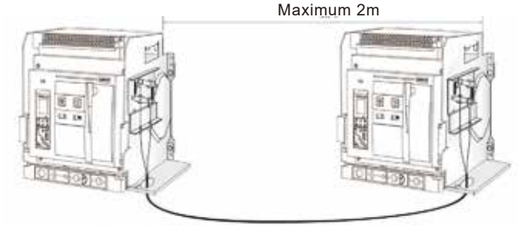

Fig. 9 Parallel-placed circuit breakers interlocking

SECONDARY CIRCUIT WIRING DIAGRAM

M type controller basic function circuit diagram (4 open 4 closed separate contacts)

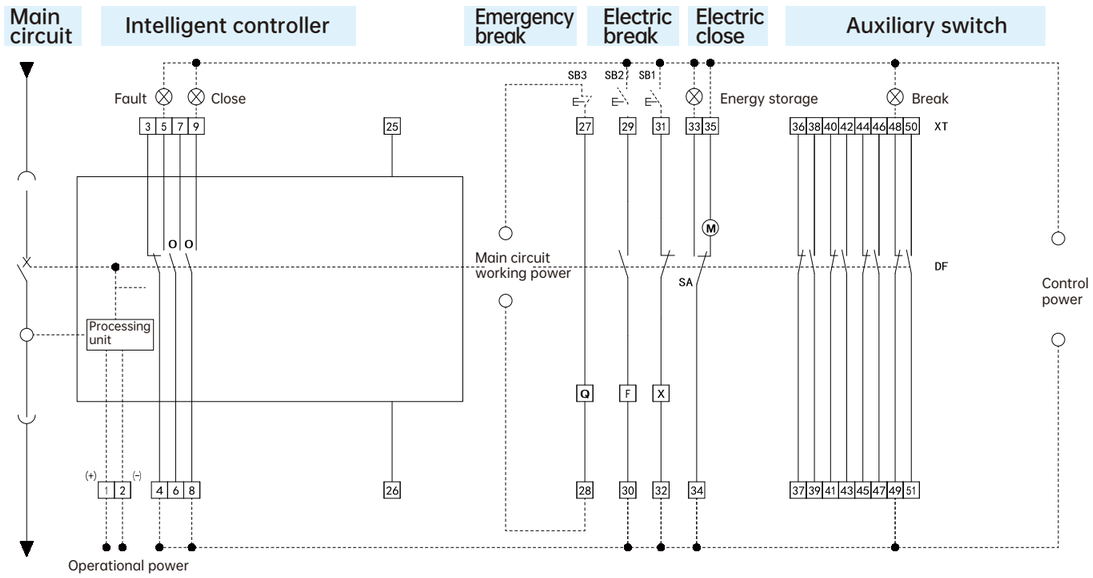

Intelligent Controller Wiring Instructions

1#, 2#: Auxiliary power input. When the auxiliary power supply is DC, 1 # is the positive
3#, 4#, 5#: Fault tripping contact output. Contact capacity is AC380V, 3A
6#, 7#, 8#, 9#: Two sets of auxiliary contacts for circuit breaker states. Contact capacity is AC380V, 3A.
If the user proposes, 6#, 7# can output normally closed contacts.
21#: N input terminal;
22#, 23#, 24#: A, B, C three phases power supply input terminals (voltmeter function need to access).
25#, 26#: Connect external neutral pole or grounding current transformer input.(3P+N configuration)
SB1: Shunt button (User-provided) SB2: Under-voltage button (User-provided) F: Shunt tripper
SB3: Closing button (user-provided) Q: Under-voltage tripper or under-voltage delay tripper.
X: Closing Electromagnet M: Energy-storage motor DF: Auxiliary contact O: Normally open contact
XT: Wiring terminal SA: Motor micro switch ⊗: Signal lamp (user-provided)

Note:

(1) If the control power supply voltages of Q, F, X and M are different, different power supplies should be connected respectively.
(2)Terminal 35# can be directly connected to power supply (automatic energy pre-storage); it can also be connected to the power supply after connecting the normally open button in series(manual control energy pre-storage)
(3) The circuit breaker in the diagram is in the state of open and no energy stored, and the main body is in the connected position.

M type controller basic function circuit diagram (4 open 4 closed combined contacts)

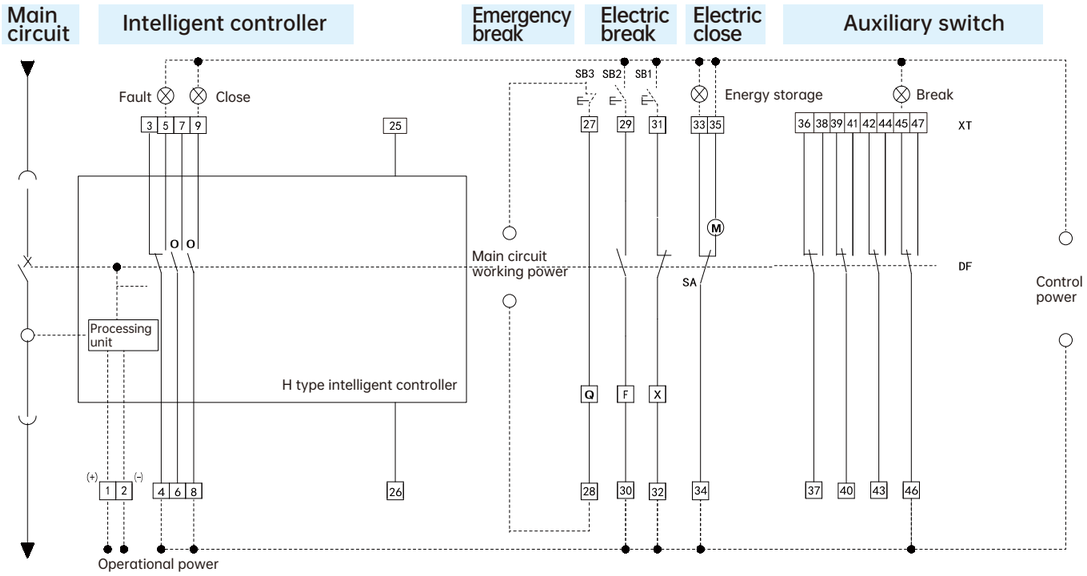

Intelligent Controller Wiring Instructions

1#, 2#: Auxiliary power input. When the auxiliary power supply is DC, 1 # is the positive
3#, 4#, 5#: Fault tripping contact output. Contact capacity is AC380V, 3A
6#, 7#, 8#, 9#: Two sets of auxiliary contacts for circuit breaker states. Contact capacity is AC380V, 3A.
If the user proposes, 6#, 7# can output normally closed contacts.
21#: N input terminal;
22#, 23#, 24#: A, B, C three phases power supply input terminals (voltmeter function need to access).
25#, 26#: Connect external neutral pole or grounding current transformer input.(3P+N configuration)
SB1: Shunt button (User-provided) SB2: Under-voltage button (User-provided) F: Shunt tripper
SB3: Closing button (user-provided) Q: Under-voltage tripper or under-voltage delay tripper.
X: Closing Electromagnet M: Energy-storage motor DF: Auxiliary contact O: Normally open contact
XT: Wiring terminal SA: Motor micro switch ⊗ : Signal lamp (user-provided)

Note:

(1) If the control power supply voltages of Q, F, X and M are different, different power supplies should be connected respectively.
(2)Terminal 35# can be directly connected to power supply (automatic energy pre-storage); it can also be connected to the power supply after connecting the normally open button in series(manual control energy pre-storage)
(3) The circuit breaker in the diagram is in the state of open and no energy stored, and the main body is in the connected position.

M type controller basic function circuit diagram (6 open 6 closed combined contacts)

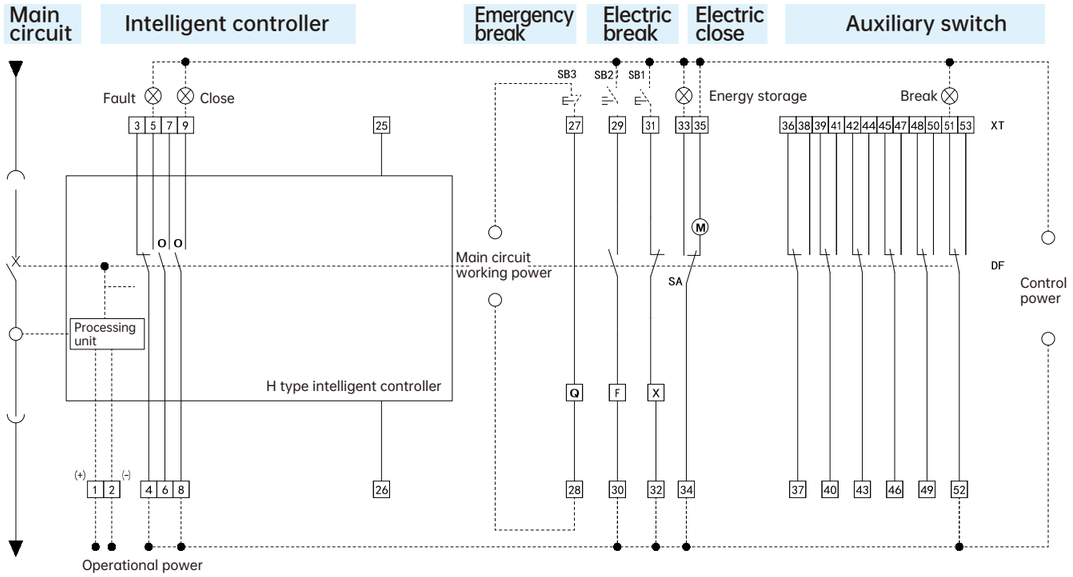

Intelligent Controller Wiring Instructions

1#, 2#: Auxiliary power input. When the auxiliary power supply is DC, 1 # is the positive
3#, 4#, 5#: Fault tripping contact output. Contact capacity is AC380V, 3A
6#, 7#, 8#, 9#: Two sets of auxiliary contacts for circuit breaker states. Contact capacity is AC380V, 3A.
If the user proposes, 6#, 7# can output normally closed contacts.
21#: N input terminal;
22#, 23#, 24#: A, B, C three phases power supply input terminals (voltmeter function need to access).
25#, 26#: Connect external neutral pole or grounding current transformer input.(3P+N configuration)

SB1: Shunt button (User-provided) SB2: Under-voltage button (User-provided) F: Shunt tripper
SB3: Closing button (user-provided) Q: Under-voltage tripper or under-voltage delay tripper.
X: Closing Electromagnet M: Energy-storage motor DF: Auxiliary contact O: Normally open contact
XT: Wiring terminal SA: Motor micro switch ⊗ : Signal lamp (user-provided)

Note:
(1) If the control power supply voltages of Q, F, X and M are different, different power supplies should be connected respectively.
(2)Terminal 35# can be directly connected to power supply (automatic energy pre-storage); it can also be connected to the power supply after connecting the normally open button in series(manual control energy pre-storage)
(3) The circuit breaker in the diagram is in the state of open and no energy stored, and the main body is in the connected position.

H type controller wiring diagram (4 open 4 closed separate contacts)

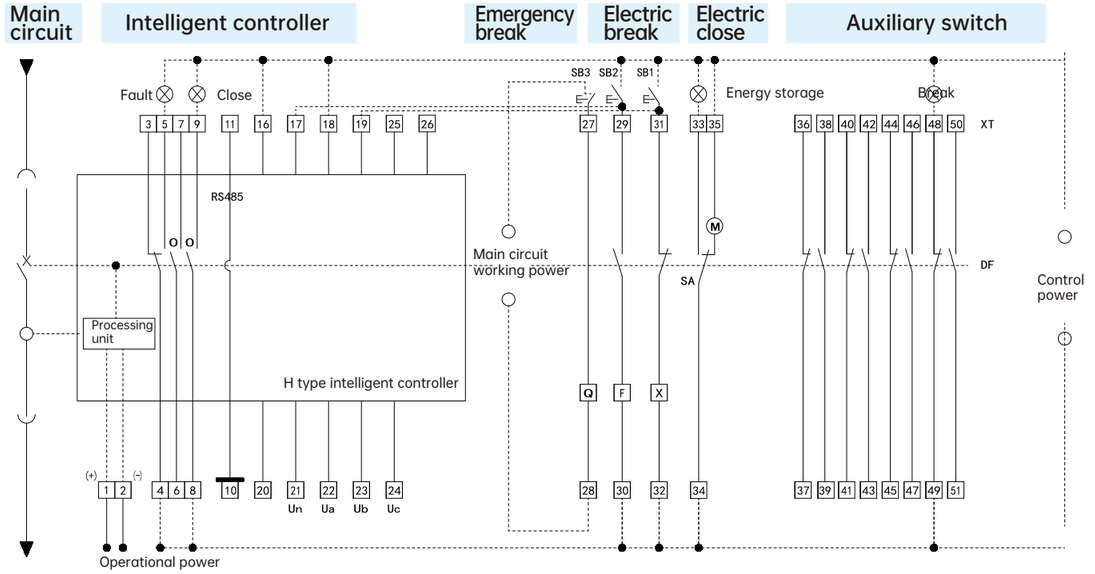

Intelligent Controller Wiring Instructions

1#, 2#: Auxiliary power input. When the auxiliary power supply is DC, 1 # is the positive.
3#, 4#, 5#: Fault tripping contact output. Contact capacity is AC380V, 3A.
6#, 7#, 8#, 9#: Two sets of auxiliary contacts for circuit breaker states. Contact capacity is AC380V, 3A.
If the user proposes, 6#, 7# can output normally closed contacts.
10#: RS485 communication P terminal
11#: RS485 communication N terminal
17#: communication remote control breaking output point (power provided by 16#),
connecting 29# terminal(F shunt tripper)
19#: communication remote control closing output point (power provided by 18#),
connecting 31# terminal(X closing electromagnetic)
20#: grounding protection; 21#: N phase voltage sampling input terminal;
22#, 23#, 24#: A, B, C phase voltage sampling input terminals (connect to circuit breaker inlet side).
25#, 26#: Connect external neutral pole or grounding current transformer input.

SB1: Shunt button (User-provided) SB2: Under-voltage button (User-provided) F: Shunt tripper
SB3: Closing button (user-provided) Q: Under-voltage tripper or under-voltage delay tripper.
X: Closing Electromagnet M: Energy-storage motor DF: Auxiliary contact O: Normally open contact
XT: Wiring terminal SA: Motor micro switch ⊗ : Signal lamp (user-provided)

Note:
(1) If the control power supply voltages of Q, F, X and M are different, different power supplies should be connected respectively.
(2)Terminal 35# can be directly connected to power supply (automatic energy pre-storage); it can also be connected to the power supply after connecting the normally open button in series(manual control energy pre-storage)
(3)The circuit breaker in the diagram is in the state of open and no energy stored, and the main body is in the connected position.

H type controller wiring diagram (4 open 4 closed combined contacts)

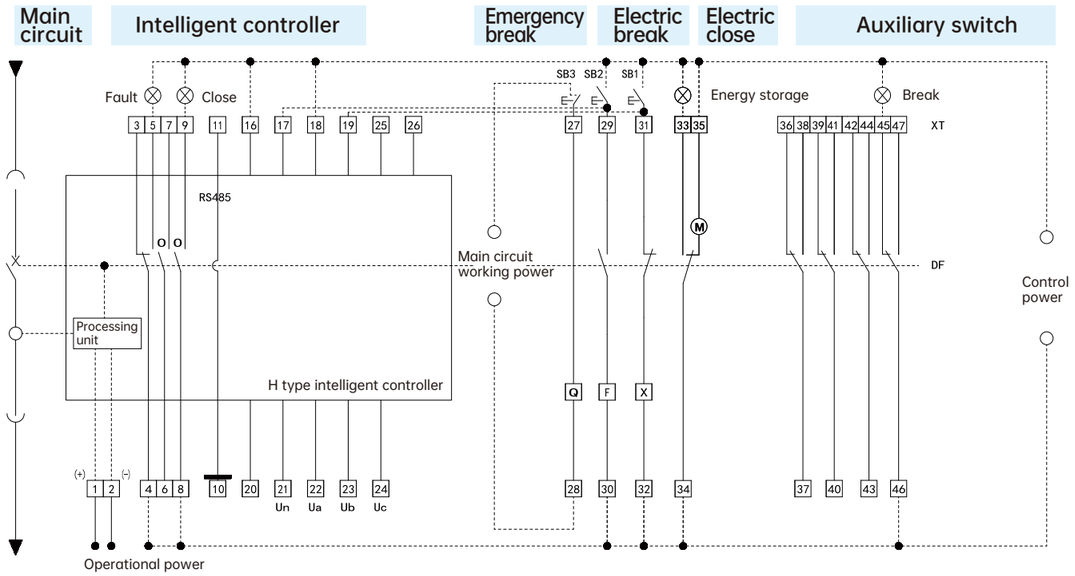

Intelligent Controller Wiring Instructions

1#, 2#: Auxiliary power input. When the auxiliary power supply is DC, 1 # is the positive.
3#, 4#, 5#: Fault tripping contact output. Contact capacity is AC380V, 3A.
6#, 7#, 8#, 9#: Two sets of auxiliary contacts for circuit breaker states. Contact capacity is AC380V, 3A.
If the user proposes, 6#, 7# can output normally closed contacts.
10#: RS485 communication P terminal
11#: RS485 communication N terminal
17#: communication remote control breaking output point (power provided by 16#),
connecting 29# terminal(F shunt tripper)
19#: communication remote control closing output point (power provided by 18#),
connecting 31# terminal(X closing electromagnetic)
20#: grounding protection; 21#: N phase voltage sampling input terminal;
22#, 23#, 24#: A, B, C phase voltage sampling input terminals (connect to circuit breaker inlet side).
25#, 26#: Connect external neutral pole or grounding current transformer input.

SB1: Shunt button (User-provided) SB2: Under-voltage button (User-provided) F: Shunt tripper
SB3: Closing button (user-provided) Q: Under-voltage tripper or under-voltage delay tripper.
X: Closing Electromagnet M: Energy-storage motor DF: Auxiliary contact O: Normally open contact
XT: Wiring terminal SA: Motor micro switch ⊗ : Signal lamp (user-provided)

Note:
(1) If the control power supply voltages of Q, F, X and M are different, different power supplies should be connected respectively.
(2)Terminal 35# can be directly connected to power supply (automatic energy pre-storage); it can also be connected to the power supply after connecting the normally open button in series(manual control energy pre-storage)
(3)The circuit breaker in the diagram is in the state of open and no energy stored, and the main body is in the connected position.

H type controller wiring diagram (6 open 6 closed combined contacts)

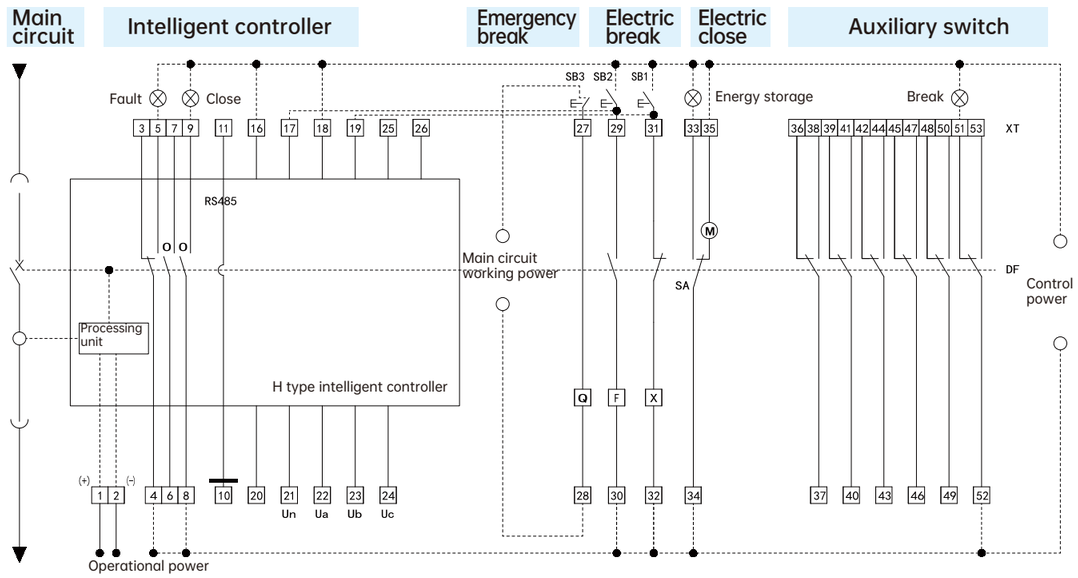

Intelligent Controller Wiring Instructions

1#, 2#: Auxiliary power input. When the auxiliary power supply is DC, 1 # is the positive.
3#, 4#, 5#: Fault tripping contact output. Contact capacity is AC380V, 3A.
6#, 7#, 8#, 9#: Two sets of auxiliary contacts for circuit breaker states. Contact capacity is AC380V, 3A.
If the user proposes, 6#, 7# can output normally closed contacts.
10#: RS485 communication P terminal
11#: RS485 communication N terminal
17#: communication remote control breaking output point (power provided by 16#),
connecting 29# terminal(F shunt tripper)
19#: communication remote control closing output point (power provided by 18#),
connecting 31# terminal(X closing electromagnetic)
20#: grounding protection; 21#: N phase voltage sampling input terminal;
22#, 23#, 24#: A, B, C phase voltage sampling input terminals (connect to circuit breaker inlet side).
25#, 26#: Connect external neutral pole or grounding current transformer input.

SB1: Shunt button (User-provided) SB2: Under-voltage button (User-provided) F: Shunt tripper
SB3: Closing button (user-provided) Q: Under-voltage tripper or under-voltage delay tripper.
X: Closing Electromagnet M: Energy-storage motor DF: Auxiliary contact O: Normally open contact
XT: Wiring terminal SA: Motor micro switch ⊗ : Signal lamp (user-provided)

Note:
(1) If the control power supply voltages of Q, F, X and M are different, different power supplies should be connected respectively.
(2)Terminal 35# can be directly connected to power supply (automatic energy pre-storage); it can also be connected to the power supply after connecting the normally open button in series(manual control energy pre-storage)
(3)The circuit breaker in the diagram is in the state of open and no energy stored, and the main body is in the connected position.

H type controller outgoing line wiring diagram

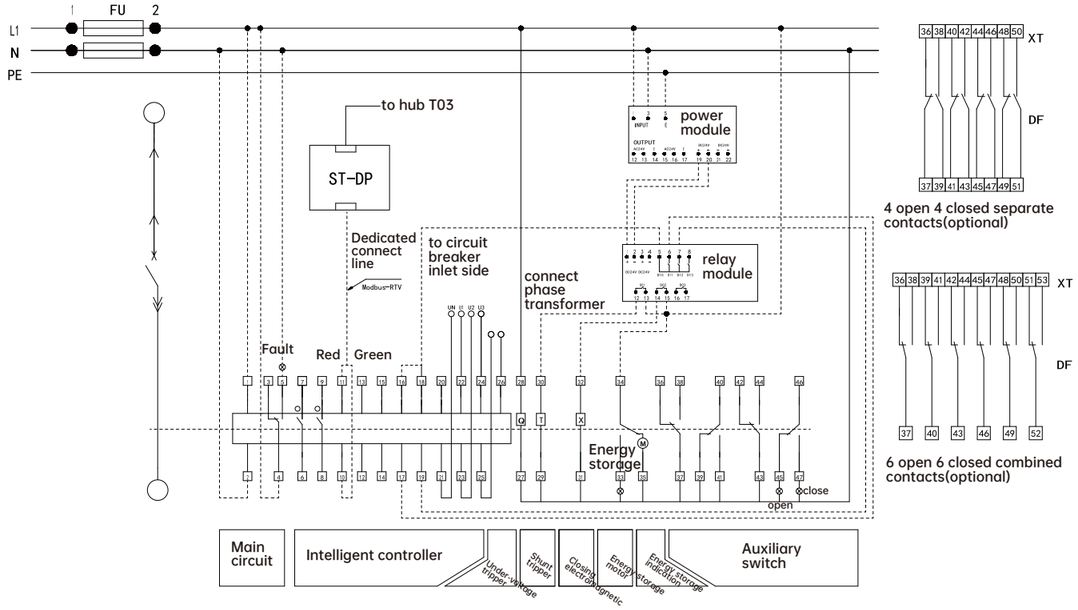

Intelligent Controller Wiring Instructions

1#, 2#: Auxiliary power input. When the auxiliary power supply is DC, 1 # is the positive.
3#, 4#, 5#: Fault tripping contact output. Contact capacity is AC380V, 3A.
6#, 7#, 8#, 9#: Two sets of auxiliary contacts for circuit breaker states. Contact capacity is AC380V, 3A.
If the user proposes, 6#, 7# can output normally closed contacts.
10#: RS485 communication P terminal,11#: RS485 communication N terminal
17#: communication remote control breaking output point (power provided by 16#),
connecting 29# terminal(F shunt tripper)
19#: communication remote control closing output point (power provided by 18#),
connecting 31# terminal(X closing electromagnetic)
20#: grounding protection; 21#: N phase voltage sampling input terminal; 22#, 23#, 24#: A, B, C phase voltage sampling input terminals (connect to circuit breaker inlet side).
25#, 26#: Connect external neutral pole or grounding current transformer input.

ST-DP: DP protocol module.
ST power module IV: power module (optional, not mandatory).
ST201: Relay module (optional, not mandatory)

Note:
(1) The dotted lines are connected by users themselves.
(2) The wiring of trippers with auxiliary function is as the above diagram.
(3) The circuit breaker in the diagram is in the state of open and no energy stored, and the main body is in the connected position.
(4)This diagram is for AC220V wiring. Please use corresponding wiring method according to the actual control input voltage.

OUTLINE DIMENSIONS DIARAM

Fixed type circuit breaker (2000 frame: 3P/4P)

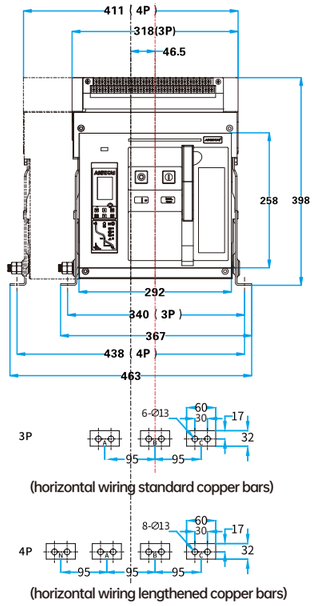

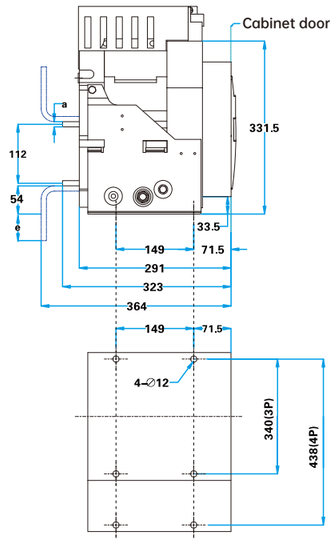

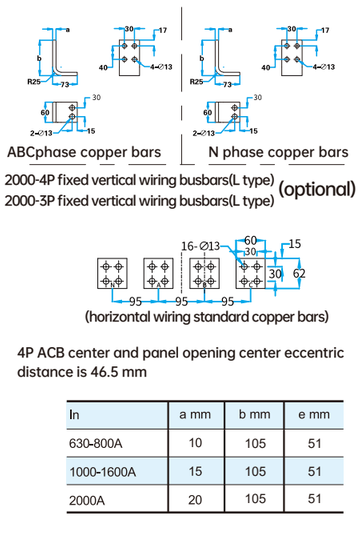

4P ACB center and panel opening center eccentric distance is 46.5 mm

In	a mm	b mm	e mm
630-800A	10	105	51
1000-1600A	15	105	51
2000A	20	105	51

Fixed air circuit breaker (3200/4000 frame capacity-expanded type: 3P/4P)

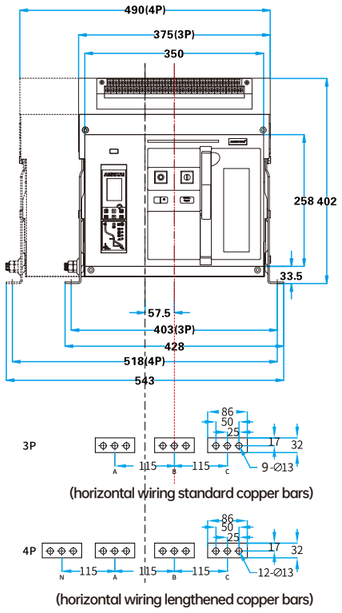

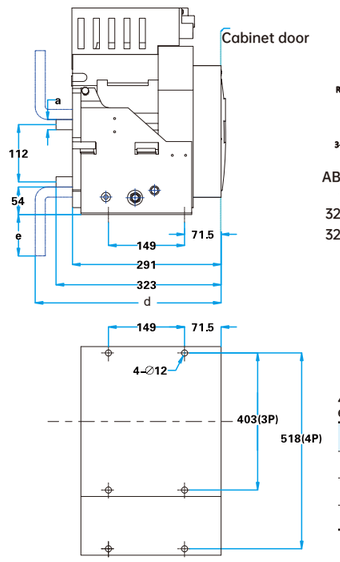

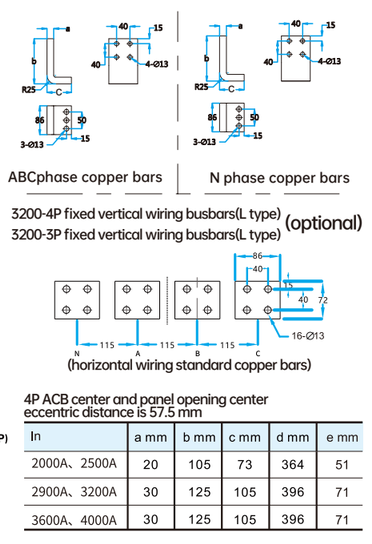

4P ACB center and panel opening center eccentric distance is 57.5 mm

In	a mm	b mm	c mm	d mm	e mm
2000A、2500A	20	105	73	364	51
2900A、3200A	30	125	105	396	71
3600A、4000A	30	125	105	396	71

OUTLINE DIMENSIONS DIARAM

Fixed type circuit breaker (4000 frame: 3P)

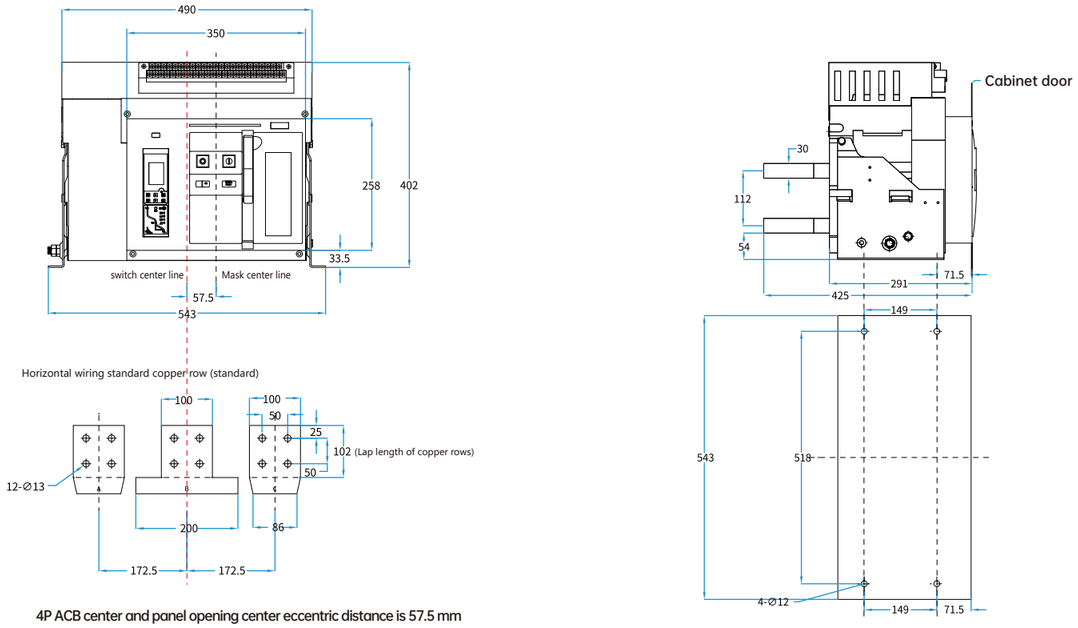

4P ACB center and panel opening center eccentric distance is 57.5 mm

Fixed type circuit breaker (4000 frame: 4P)

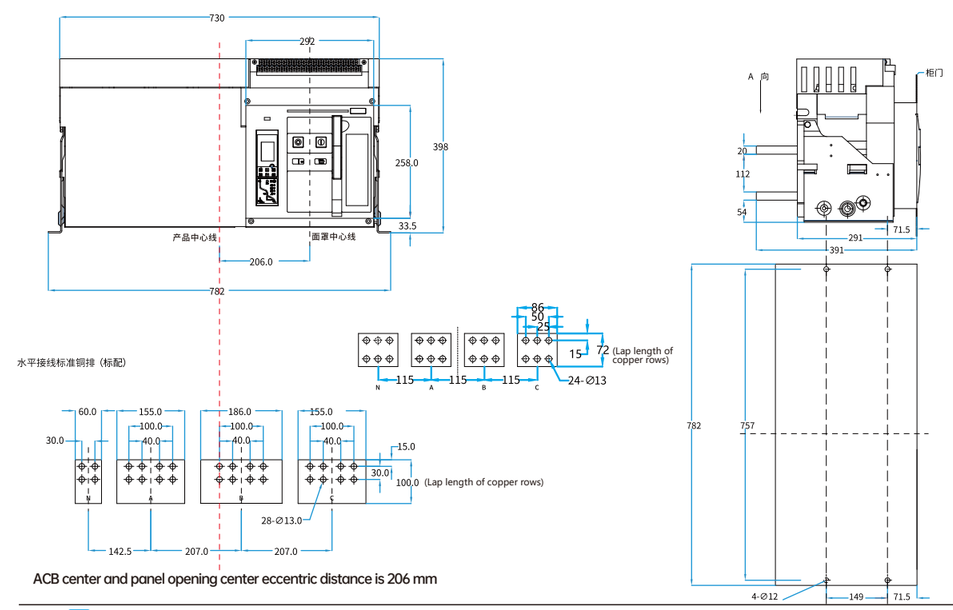

ACB center and panel opening center eccentric distance is 206 mm

OUTLINE DIMENSIONS DIARAM

Fixed type circuit breaker (6300 frame: 4000A/3P&5000A/3P)

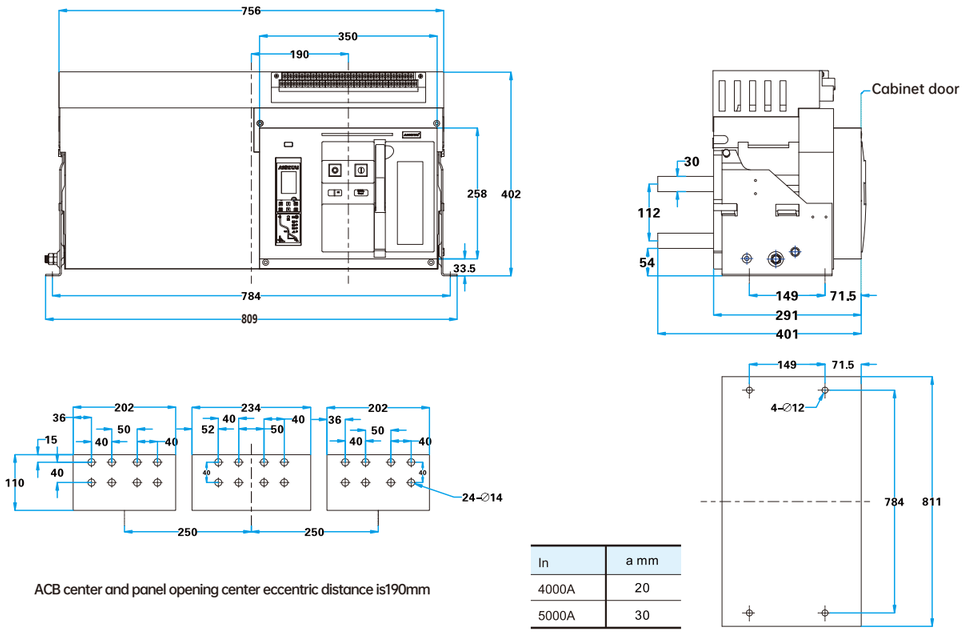

ACB center and panel opening center eccentric distance is190mm

In	a mm
4000A	20
5000A	30

Fixed type circuit breaker (6300 frame: 4000A/4P&5000A/4P)

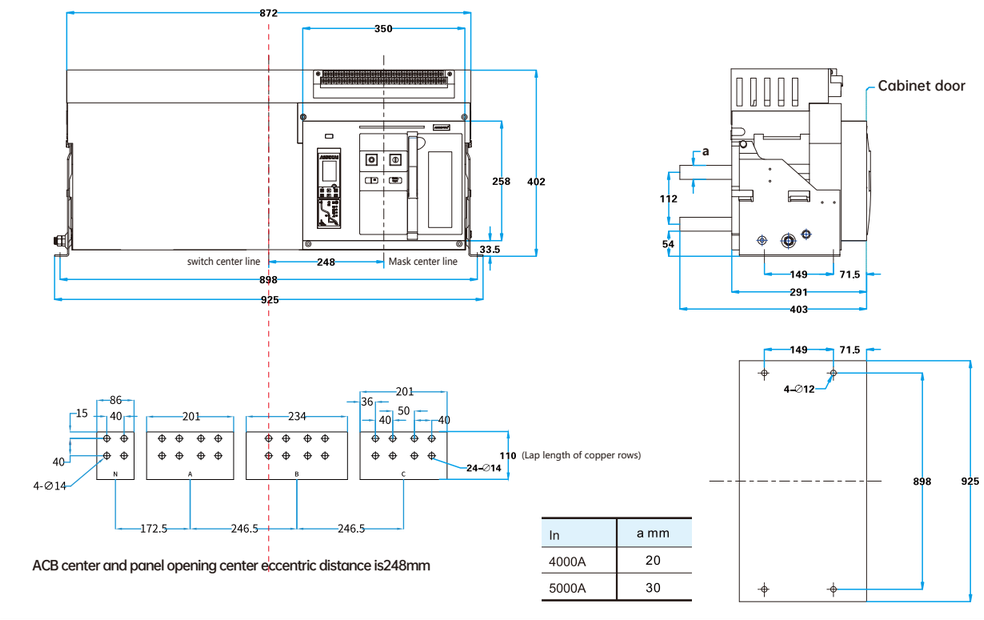

ACB center and panel opening center eccentric distance is248mm

In	a mm
4000A	20
5000A	30

OUTLINE DIMENSIONS DIARAM

Fixed type circuit breaker (6300 frame: 6300A/3P)

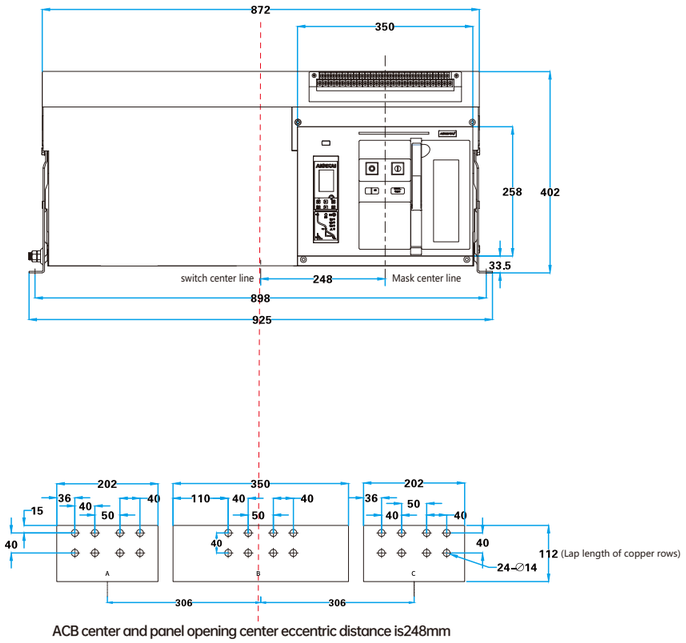

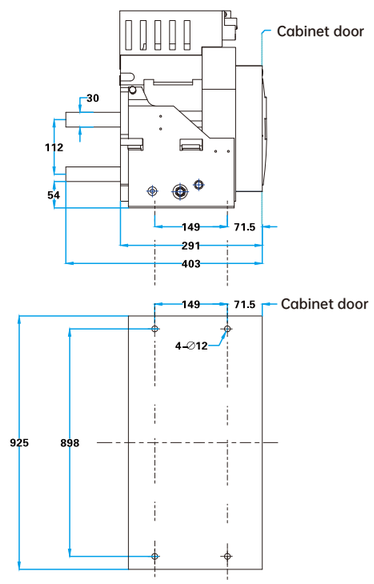

ACB center and panel opening center eccentric distance is248mm

Fixed type circuit breaker (6300 frame: 6300A/4P)

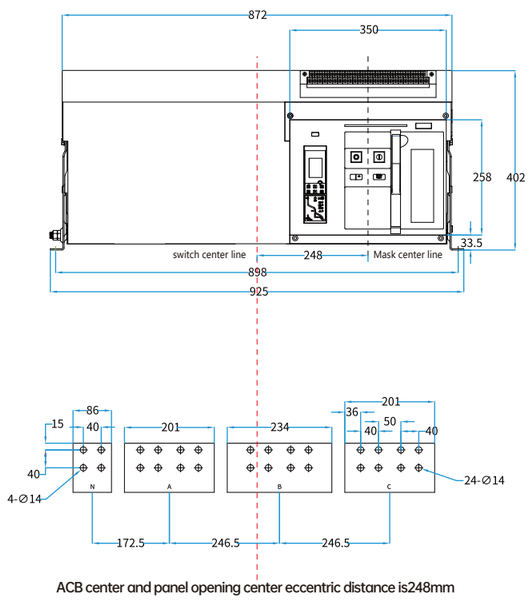

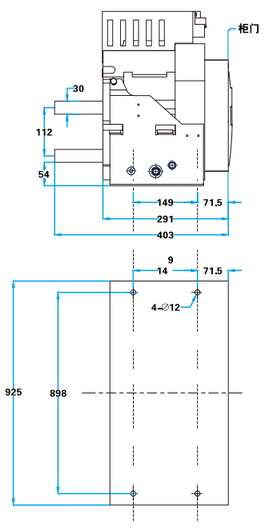

ACB center and panel opening center eccentric distance is248mm

OUTLINE DIMENSIONS DIARAM

Drawout type circuit breaker (2000 frame: 3P/4P)

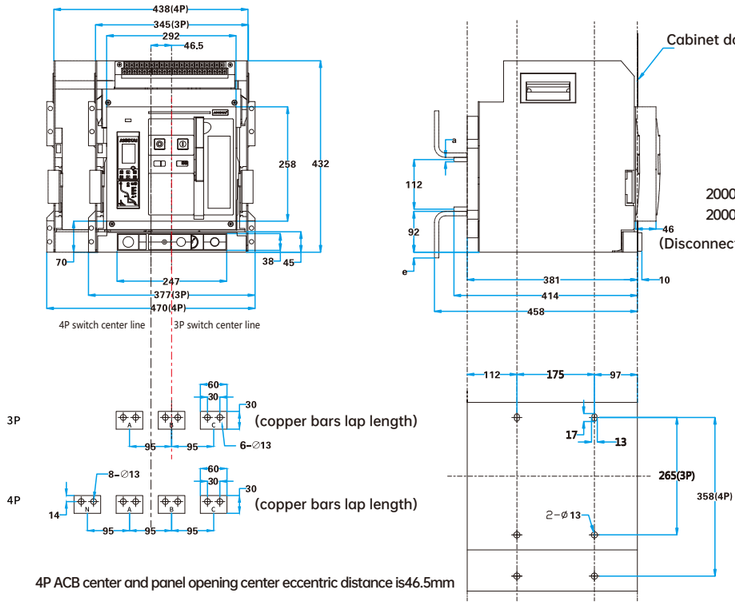

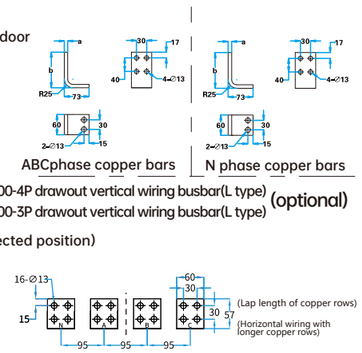

4P ACB center and panel opening center eccentric distance is46.5mm

4P ACB center and panel opening center eccentric distance is 46.5 mm

In	a mm	b mm	e mm
630-800A	10	105	13
1000-1600A	15	105	13
2000A	20	105	13

Drawout type circuit breaker (3200/4000 frame capacity-expanded type: 3P/4P)

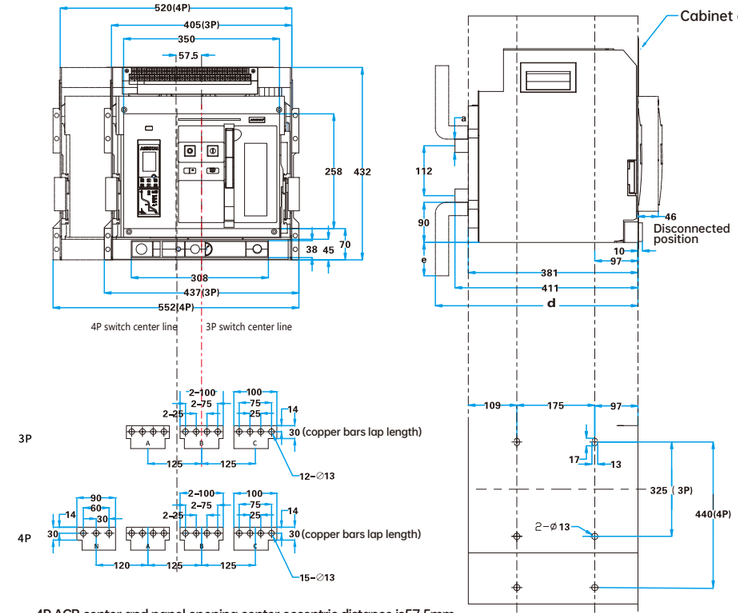

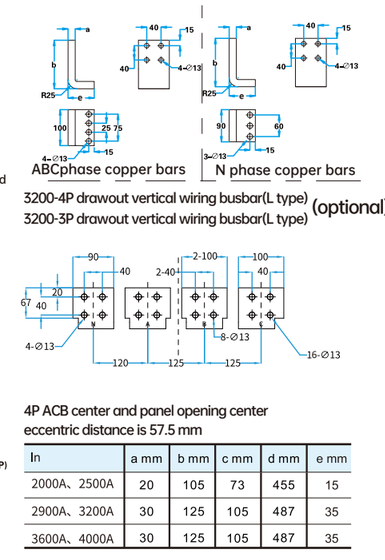

4P ACB center and panel opening center eccentric distance is57.5mm

4P ACB center and panel opening center eccentric distance is 57.5 mm

In	a mm	b mm	c mm	d mm	e mm
2000A、2500A	20	105	73	455	15
2900A、3200A	30	125	105	487	35
3600A、4000A	30	125	105	487	35

OUTLINE DIMENSIONS DIARAM

Drawout type circuit breaker (standard type 4000 frame: 3P)

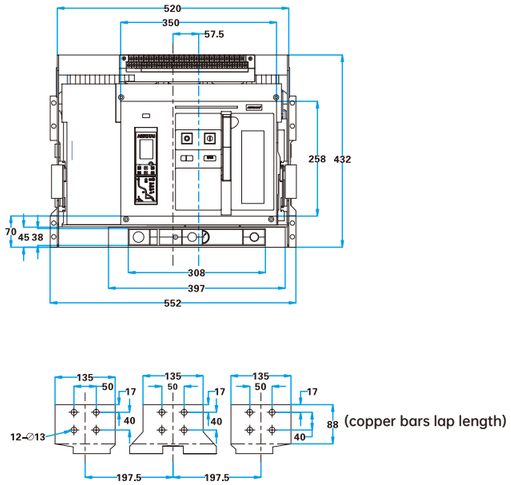

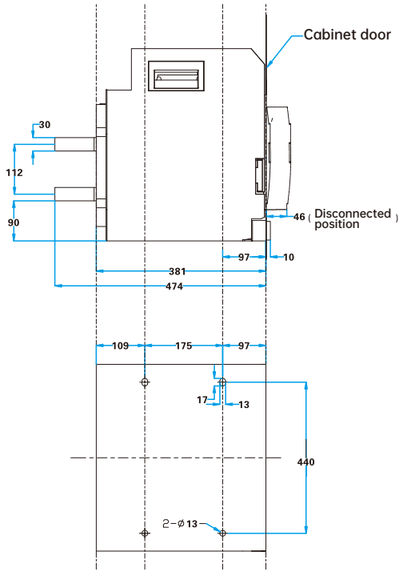

4P ACB center and panel opening center eccentric distance is 57.5 mm

Drawout type circuit breaker (standard type 4000 frame: 4P)

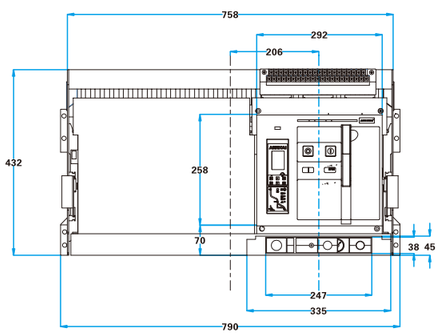

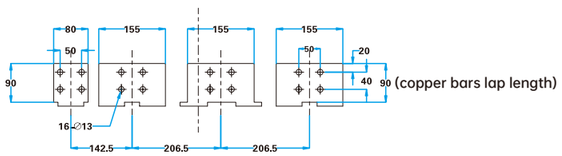

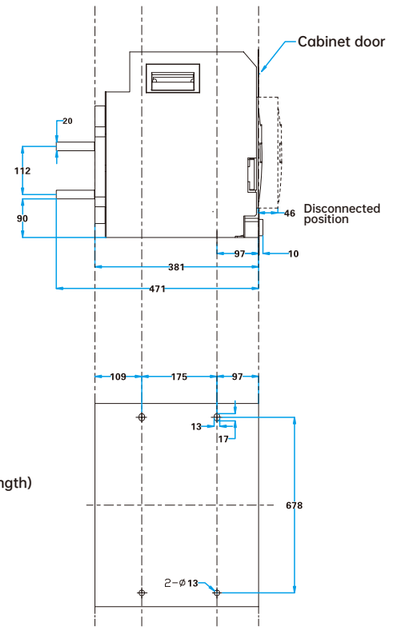

4P ACB center and panel opening center eccentric distance is 206 mm

OUTLINE DIMENSIONS DIARAM

Drawout type circuit breaker (6300 frame: 4000A/3P, 5000A/3P)

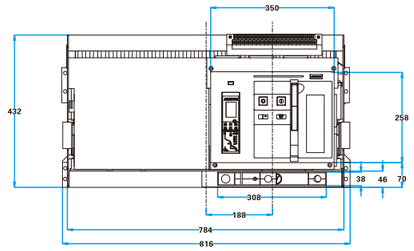

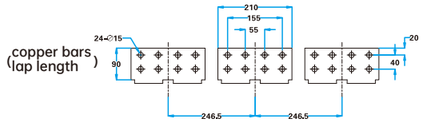

In	a mm
4000A	20
5000A	30

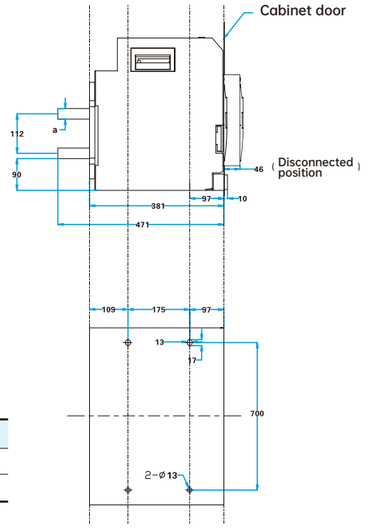

Note:
(1) The thickness of copper bars of rated 5000A is 30mm; the thickness of copper bars of rated 4000A is 20mm.
(2)ACB center and panel opening center eccentric distance is 188 mm

Drawout type circuit breaker (6300 frame: 4000A/4P, 5000A/4P)

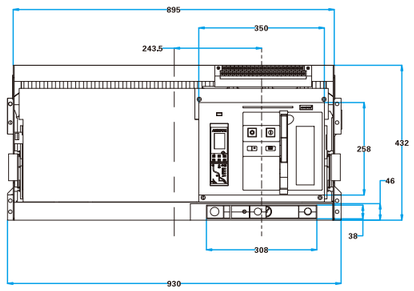

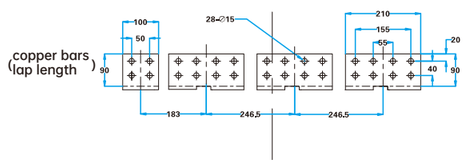

In	a mm
4000A	20
5000A	30

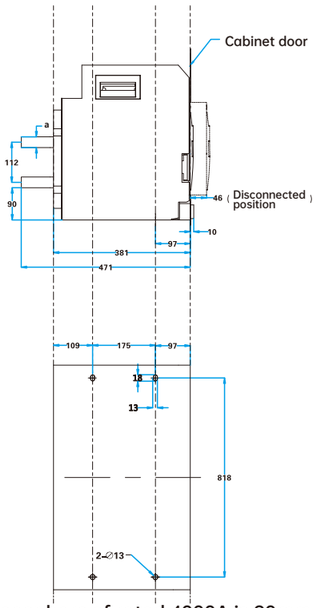

Note:
(1) The thickness of copper bars of rated 5000A is 30mm; the thickness of copper bars of rated 4000A is 20mm.
(2)ACB center and panel opening center eccentric distance is 243.5 mm

OUTLINE DIMENSIONS DIAGRAM

Drawout type circuit breaker (6300 frame: 6300A/3P)

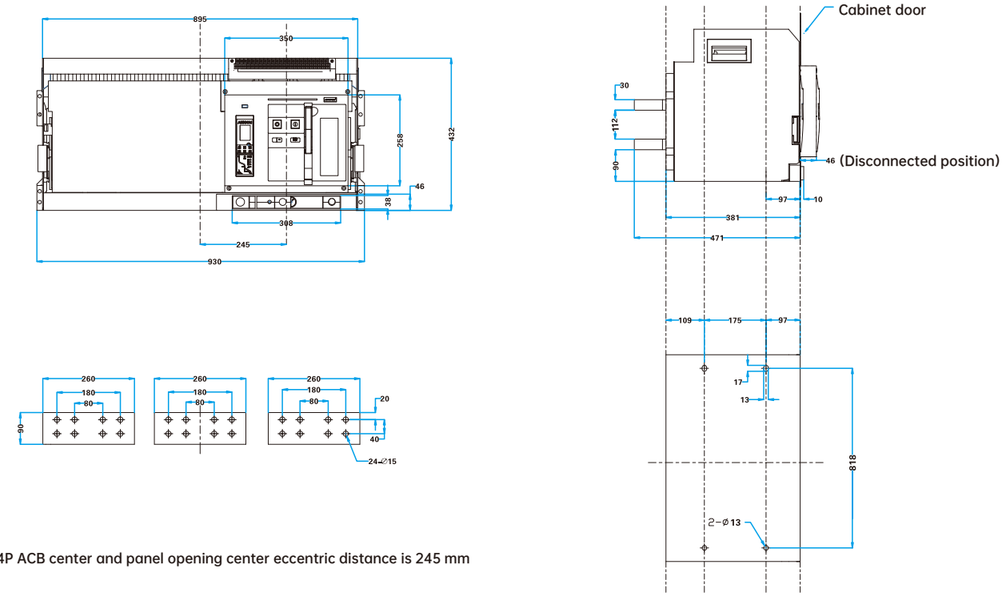

4P ACB center and panel opening center eccentric distance is 245 mm

Drawout type circuit breaker (6300 frame: 6300A/4P)

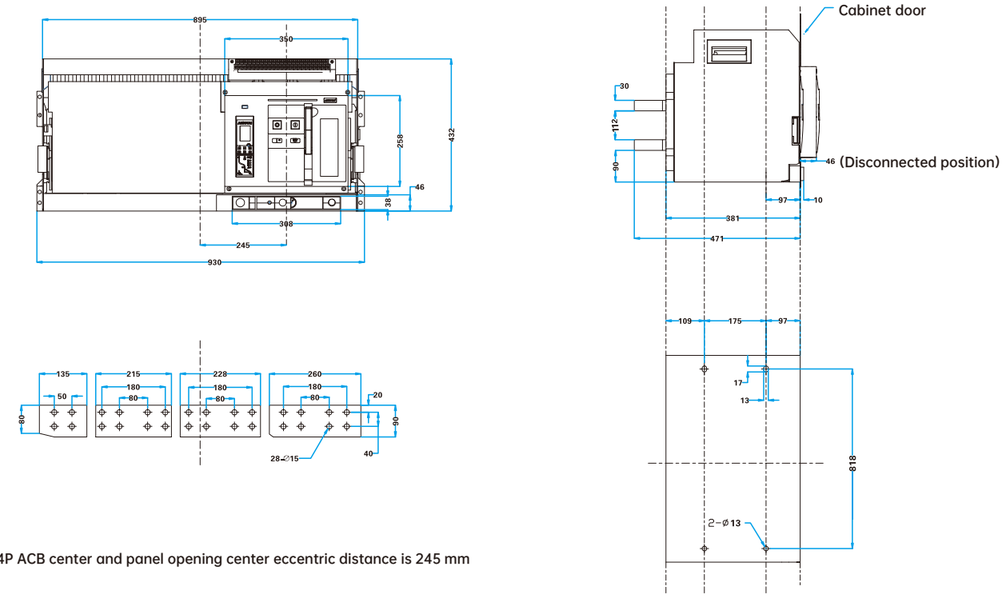

4P ACB center and panel opening center eccentric distance is 245 mm

OUTLINE DIMENSIONS DIAGRAM

Drawout type circuit breaker (central-positioned 6300 frame: 6300A/4P)

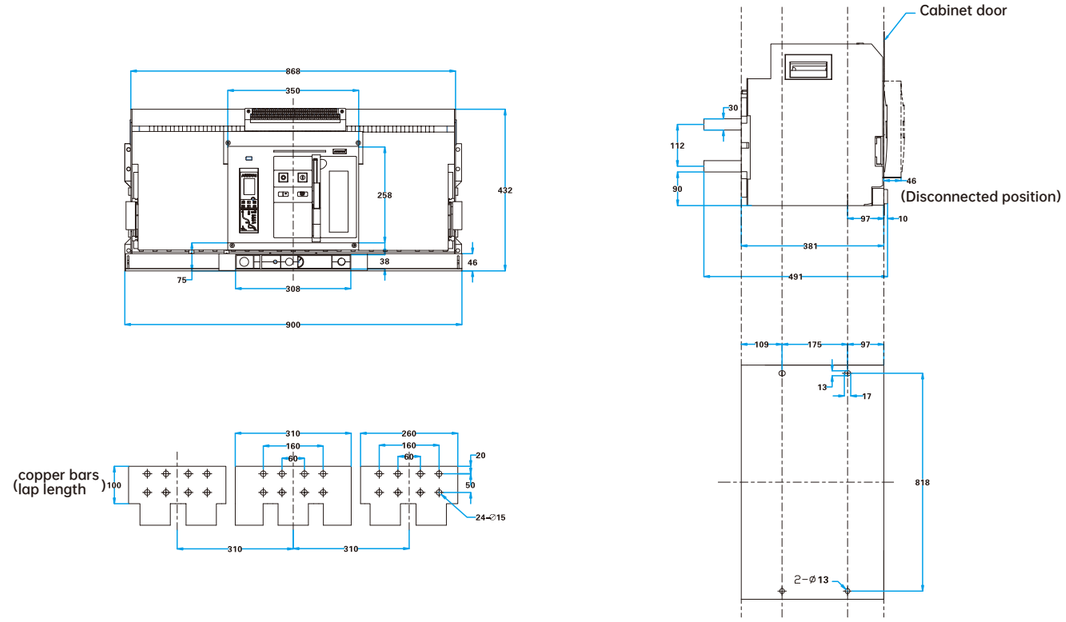

Panel Opening Installation Dimensions Diagram

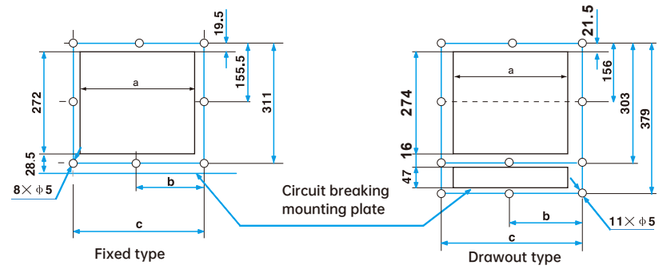

Inm	a nm	b nm	c nm
2000A-3P/4P	306	173	346
3200A-3P/4P	366	202.5	405
4000 Capacity Enhancement Shell Holder - 3P/4P	366	202.5	405
4000 Standard Type-3P	366	202.5	405
4000 Standard Type-4P	306	173	346
6300A-3P/4P	366	202.5	405

User connecting copper bars specification. The quantity is shown in the following table.

Rated current	630A	800A	1000A	1250A	1600A	2000A	2500A	2900A	3200A	3600A	4000A	5000A	6300A
External copper bars specification	40×5	50×5	60×5	80×5	100×5	100×5	100×5	100×10	120×10	120×10	120×10	120×10	120×10
Number of bars of each pole	2	2	2	2	2	3	4	3	3	4	4	5	6

Remarks:According to the actual requirements, select the busbar wiring mode

INSTALLATION,OPERATION AND MAINTENANCE

Installation method

- Check whether the specifications of circuit breakers meet the requirements before installation.
- Before installation, check the insulation resistance of the circuit breaker with 500V megohmmeter. The resistance value should be not less 10MΩ when the ambient medium temperature is 20±5℃ and relative humidity is 50%~70%. Otherwise, dry the circuit breaker until the insulation resistance reaches the requirements.
- When installing the circuit breaker, the circuit breaker should be in a vertical state and be fastened with M10 screws. For the drawout type circuit breaker, the circuit breaker should be pulled out first. Fasten the cradle before cranking the circuit breaker back into the cradle.
- When installing, the circuit breaker should have a reliable protective grounding and there should be obvious grounding mark at the grounding location. For the fixed circuit breaker, the safety zone should be observed strictly. After the installation of circuit breaker and the wiring according to the relevant wiring diagram, the following operation tests should be carried out before the circuit is powered on (the drawout type circuit breaker is in the "test" position).

a. Check whether the rated voltages of under-voltage tripper, shunt tripper, energy-releasing electromagnet and electric energy-storage mechanism are in consistent with the voltage of the connected power supply. Then connect the secondary circuit. (Under-voltage tripper must be powered on before circuit breaker can be operated)

b. Check whether the reset button of the intelligent controller is reset state. Only when the reset button is in the reset position, can the circuit breaker be closed.

c. Pull the handle on the panel plate upward and downward for 7 times, the "Energy stored" is displayed and a "click" sound is heard. It means that the energy storage is completed. Press the "I" button or power on the energy-releasing electromagnet, the circuit breaker is reliably closed. Pull the handle again and the energy can be stored again.

d. When using motorized energy-storage, power on the motor power, the motor starts to work until "Energy stored" is displayed and a "click" sound is heard. It means that the energy storage is completed. The motor power is cut off automatically. Press the "I" button or power on the energy-releasing electromagnet, the circuit breaker is reliably closed and the motor is powered on again to store the energy preparing for the next closing.

e. After the circuit breaker is closed, no matter whether under-voltage tripper, shunt tripper, "O" button on the panel or the tripping test button on the intelligent controller should make the circuit breaker break.

TROUBLESHOOTING

	Cause of fault		Treatment
ACB cannot store energy	ACB cannot store energy manually	A.Latch spring in operating handle	Hook the spring back to its original position, or contact the manufacturer
		B.Energy storage mechanism fault	Energy storage mechanism fault, contact the manufacturer
	ACB cannot store energy electrically	A.Energy motor has no power or is damaged	Check whether the motor has power, replace the motor if it's damaged
		B.The voltage of the electric operating mechanism is low	Check the control voltage of operating mechanism
		C.Energy storage mechanism failure	Energy storage mechanism failure, contact the manufacturer
ACB cannot close	Under-voltage tripper fails to actuate	A.Under-voltage tripper has no power or the voltage is below 85%Ue	Check whether the tripper power is on, and then check whether the upper and lower plug knives of the terminal have good contact. If the voltage is too low, adjust the operational voltage.
		B.Under-voltage tripper coil or delay control part fails	Repair or replace under-voltage tripper
		C. If it is actuate-assisted under-voltage tripper, the reaction spring on the large shaft of the mechanism is broken or displaced	Repair the reaction spring
	Energy-release electromagnetic fault	A. The control power voltage of the energy-release electromagnetic is below 85%Ue	Adjust the voltage
		B. The energy-release electromagnet is damaged	Contact the manufacturer to adjust the energy-release electromagnet
		C. The energy-release electromagnet tripping screw rod problem	Lengthen the screw rod to make it long enough to jack open the plastic tripping part
	The screw rod of the shunt tripper is too long to press the tripping half shaft immovably		Shorten the screw rod to release the immovable tripping half shaft
	Poor matching with cradle		Check the circuit breaker, which should be in the test or connected position
	The plastic tripping parts of the intelligent controller press immovably the plastic tripping parts of the mechanism		Raise the intelligent controller or use a file to file off part of the connection between the two plastic parts.
	Operating mechanism fault	A.The plastic part under the energy-release electromagnet is displaced	Take the energy-release electromagnet down and place the plastic part to its original position
		B.Mechanism has internal fault	Contact the manufacturer to repair.
	If it is a circuit breaker with mechanical interlocking, the connection method is wrong so that the tripping half shaft is stuck is in tripping state.		Adjust the position of the mechanical interlocking.
			If overload current makes the circuit breaker trip, or other reasons make the reset button on the intelligent controller pop out, the reset button must be pressed down before the circuit breaker can be closed.
ACB cannot break	ACB cannot open manually	A.Operating mechanism fault	Check the operating mechanism. If there is stuck problem, please contact the manufacturer.
		B.The adjustment screw on the tripping half shat is not in place	Adjust the adjustment screw position
	ACB cannot open electrically	A.The shunt tripper has no power or the voltage is below 85% Ue	Supply the power to the shunt tripper or adjust the operational voltage
		B.The shunt tripper is damaged	Contact the manufacturer to replace the shunt tripper
		C.Operating mechanism fault	Check the operating mechanism. If there is stuck problem, please contact the manufacturer
	ACB is short-circuited or over-current non-tripping	A.The controller is damaged	Contact the manufacturer to replace the controller
		B.The transformer signal line is damaged or the contact with the controller is not good. These is no signal input into the controller.	Repair or replace the transformer
		C.The mechanism internals get stuck. The tripping signal from the intelligent controller cannot make the mechanism trip.	Contact the manufacturer
The drawout ACB cannot be pulled out in "disconnected" position	The circuit breaker is not completely in the "disconnected" position		Contact the manufacturer
	The cranking handle is not pulled out after the drawer is cranked out		Pull the cranking handle out and the circuit breaker can be pulled out.
	There are foreign objects fallen into the cradle, causing the gear of the in-out mechanism to get stuck and the circuit breaker body is hooked onto the top plate of the cradle		Check and exclude foreign objects. If it still cannot be extracted, contact the manufacturer
The drawout ACB cannot be cranked to "connected" position	There are foreign objects fallen into the cradle, causing the gear of the in-out mechanism to get stuck and the circuit breaker body is hooked onto the top plate of the cradle.		Check and exclude foreign objects. If it still cannot be extracted, contact the manufacturer
	The rated current of the circuit breaker body does not match with that of the cradle (i.e., the busbars thickness are not same)		Check the busbars thickness of the circuit breaker body is in consistent with that of the cradle
	The circuit breaker is not completely inserted into the cradle and is cranked in forcibly		Place the circuit breaker body properly before cranking in
	The upper and lower wiring terminals are pressed immovably		Align the upper and the lower parts of wiring terminals properly
The controller has no display	The intelligent controller does not have power		Supply the operation power to controller
	The intelligent controller has internal fault		Contact the manufacturer
The controller does not indicate properly	The intelligent controller has internal fault		Contact the manufacturer
	There is strong external electromagnetic interference source		Exclude the external electromagnetic interference source

ORDERING TECHNICAL SPECIFICATIONS

Business Information		
Name:	Project:	Quantity:
Model:	Date:	Scheduled delivery date:

Technical Information

Rated voltage:
☐ AC 380V/400V ☐ AC 660V/690V

Rated frequency:
☐ 50Hz ☐ 60Hz

Number of poles:
☐ 3P (typically equipped with LSI 3 sections protection function)
☐ 4P(typically equipped with LSIG 4 sections function.
Please check the box if you want to turn on this function in the factory ☐)
☐ 3P+N(3P+external current transformer, typically equipped with LSIG 4 sections function.
Please check the box if you want to turn on this function in the factory ☐)

Frame ratings: ☐ 2000 ☐ 2500 ☐ 3200 ☐ 4000 ☐ 6300

Rated current In:
☐ 630A ☐ 800A ☐ 1000A ☐ 1250A ☐ 1600A ☐ 2000A ☐ 2500A
☐ 2900A ☐ 3200A ☐ 3600A ☐ 4000A ☐ 5000A ☐ 6300A
Setting current Ir1= _____A (Default value: 100% rated current)

Installation method:
☐ Drawout type ☐ Fixed type

Intelligent controller	Controller model	☐ M type(LCD type) Include: long delay, short delay, instantaneous, thermal memory, test, parameter setting, bar graph display for current, fault inquiry and memory, etc.	☐ H type (LCD communication type) Include all the functions of M type with additional functions: RS485 communication, four remote functions
	Operational voltage of controller	☐AC380V/400V ☐ AC220V/230V ☐Customized DC220V ☐Customized DC110V ☐Customized DC24V	
Standard accessories	Opening coil	☐AC380V/400V ☐ AC220V/230V ☐Customized DC220V ☐Customized DC110V ☐Customized DC24V	
	Closing coil	☐AC380V/400V ☐ AC220V/230V ☐Customized DC220V ☐Customized DC110V ☐Customized DC24V	
	Energy-storage motor	☐AC380V/400V ☐ AC220V/230V ☐Customized DC220V ☐Customized DC110V ☐Customized DC24V	
	Others	4 open 4 closed combined contacts, threshold , primary cables fixing screws	
Optional contacts	Auxiliary contact	☐ 4 open 4 closed separate contacts ☐ 6 open 6 closed combined contacts ☐ Customized _____	
	Tripper	☐ Under-voltage instantaneous tripper ☐ (DC24V can be customized)	
		☐ Under-voltage delay tripper Delay time: ☐0S ☐1S ☐2S ☐3S ☐5S ☐10S ☐15S ☐20S	
		☐ Voltage loss(zero voltage) delay tripper Delay time: ☐0S ☐0.5S ☐1S ☐2S ☐3S ☐4S ☐5S ☐6S	
	Operational voltage of tripper	☐ AC380V/400 ☐ AC220V/230V ☐ Customized DC220V ☐ Customized DC110V	
	Mechanical interlocking	☐ 2 units interlocking ☐ 3 units interlocking ☐ Cable ☐ Link rod ☐ Horizontal installation ☐ Vertical installation _____sets	
	Breaking position lock (key lock)	☐ 1 lock 1 key_____sets ☐ 2 locks 1 key_____sets ☐ 3 locks 2 keys _____sets ☐ 4 locks 2 keys _____ sets ☐5 locks 3 keys _____sets ☐ Customized___ locks___keys _____ sets	
	External current transformer (choose one of the two)	☐ Grounding protection function	Connect to external neutral line current transformer_____sets, neutral line copper bars dimensions: _____
		☐ Leakage protection function	Connect to external rectangle current transformer_____sets
	Others	☐ Phase partitions_____sets ☐ Open/Close button locking cover_____sets ☐ Door interlocking ____sets	

Remarks

1、Prices include standard accessories (see table above). Other optional accessories and customized accessories are charged additionally.
2、In" ☐ "tick " √ ", in" _____ "fill values. Breaking/Closing coil, energy-storage motor and tripper can customized in special voltage. Contact our company for details.
3、Default current protection value setting: long delay: 1In(delay 15s), short delay: definite/inverse time limit=8/4In(delay 0.2s), instantaneous: 12In
4、Grounding protection function is turned off by default and can be turned on by customer's requirement. The default setting is: grounding protection=0.4In(delay 0.4s)
5、Other technical requirements: _____
6、The default use location of the product is less than 2000 meters above sea level, ambient temperature -5 degrees Celsius to +40 degrees Celsius, beyond the range need to derate

Customer Confirmation Signature:		Technical Contact / Phone:	