AiSIKAI®
POWER THE FUTURE




CE

# SKR2D-E

## INTELLIGENT DIN-RAIL DUAL-POWER CONTROLLER

## Overview

Suitable for PC-level ATS transfer switches, it features the function of sending a start signal to the generator set upon mains power abnormality. It is widely applied in sectors such as telecommunications, rail transit, data centers, and smart buildings.

## Panel Operation

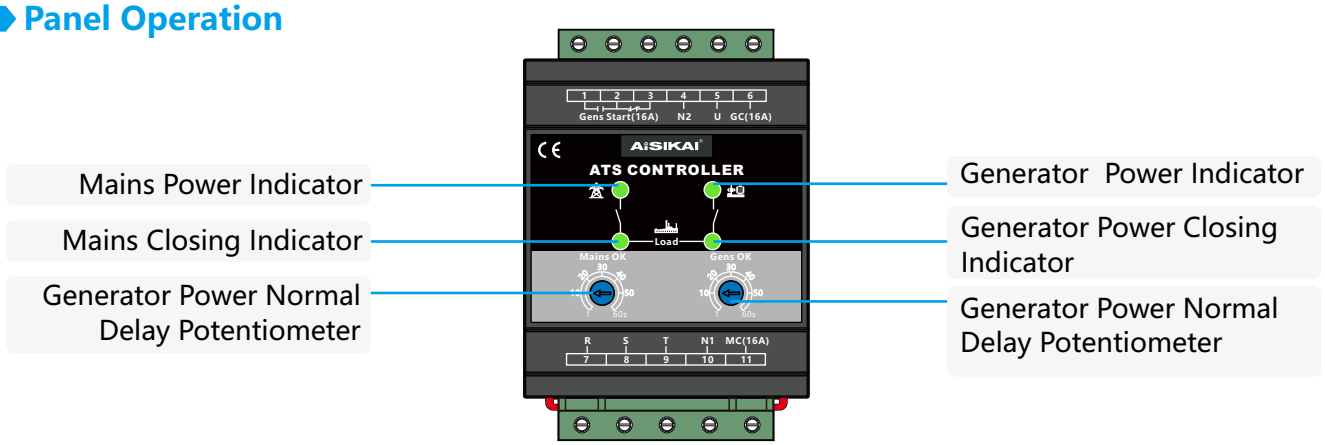


- **Potentiometer Function Description**

| Definition | Description |
|---|---|
| Mains Power Normal Delay Potentiometer | Rotate the potentiometer knob to set the mains power normal delay time (range: **1-60s**), with a factory default of **5s**. |
| Generator Power Normal Delay Potentiometer | Rotate the potentiometer knob to set the generator power normal delay time (range: **1-60s**), with a factory default of **5s**. |

- **Indicator Description**

| Definition | Description |
|---|---|
| Mains Power Indicator | • **Light on:** Mains power is normal;<br>• **Light off:** No mains power;<br>• **Slow flashing:** Undervoltage or phase loss in the mains power;<br>• **Rapid flashing:** Overvoltage in the mains power. |
| Generator Power Indicator | • **Light on:** Generator power supply is normal;<br>• **Light off:** No generator power supply;<br>• **Slow flashing:** Undervoltage in the generator power supply;<br>• **Rapid flashing:** Overvoltage in the generator power supply. |
| Mains Closing Indicator | • **Light on:** The load is powered by the mains supply. |
| Generator Closing Indicator | • **Light on:** The load is powered by the generator supply. |

Note: Overvoltage value: **≥AC275V**; Undervoltage value: **≤AC160V**

- **Operation and Control**

| | |
|---|---|
| Mains Closing | When the mains power supply is normal, the mains indicator light of the controller turns on. After the set delay period, the mains closing relay energizes, the coil of the generator set start relay is powered, and the mains closing indicator light illuminates. |
| Generator Closing | When the mains power supply is abnormal, the controller's mains closing indicator light remains off, the mains closing relay is de-energized, and the coil of the generator set start relay is powered off. At this point, if the generator set is supplying power and the power is normal, the generator indicator light turns on. After the set delay period, the generator closing relay energizes, and the generator closing indicator light illuminates. |

## Technical Parameters

| | |
|---|---|
| Power Supply | **Operating Voltage :** Powered by AC power supplies **A1N1/A2N2**, with a rated voltage of **AC220V** (range: **AC175~280V**)<br>**Overall Power Consumption :** The power consumption of the voltage circuit under the rated voltage is approximately **2W**. |
| AC Voltage Input | Three-phase four-wire : **AC(175~280)V**<br>Single-phase two-wire : **AC(175~280)V** |
| Relay | Generator Set Start Relay : **16A 250VAC**, passive normally open/normally closed output<br>Mains Closing Relay : **16A 250VAC**, active normally open output<br>Generator Closing Relay : **16A 250VAC**, active normally open output |
| Environment | Operating Temperature : **(-25~+70)°C**<br>Operating Humidity : **(20~93)%RH**<br>Storage Temperature : **(-25~+70)°C** |
| Dimensions | **77.5X61X115mm** |

## Overall Dimensions (Unit: mm)

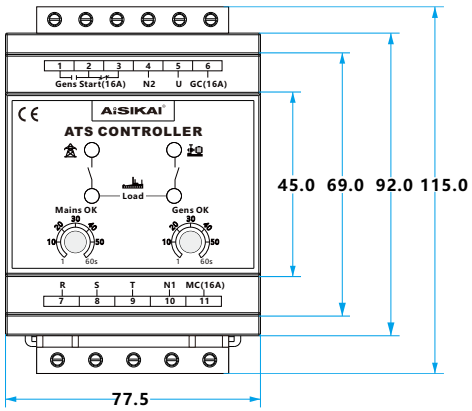


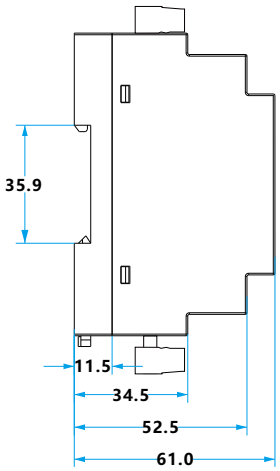



**JIANGSU AISIKAI ELECTRIC CO., LTD.**

No. 5 Chuangye Road, Chenji Town, Yizheng City, Jiangsu Province, China
+86 514 8387 2777/2888
sales@aisikai.com
www.aisikaigroup.com


LinkedIn YouTube