DECLARATION

Copyright © All rights reserved. Without prior written permission from our company, no paragraph or chapter content of this manual may be transcribed, copied, or reproduced or disseminated in any form. Otherwise, the violator shall bear all consequences, and our company reserves all legal rights.

Our company reserves the right to modify the product specifications described in this manual without prior notice. Before placing an order, please consult your local distributor for the latest specifications of this product.

AISIKAI-ATS-ASKQ6-PSG-26V1.0

© AISIKAI ELECTRIC COPYRIGHT

LinkedIn

YouTube

AiSIKAI®

POWER THE FUTURE

ASKQ6 SERIES

AUTOMATIC TRANSFER SWITCH

SELECTION GUIDE

JIANGSU AISIKAI ELECTRIC CO., LTD.

Tel : +86-514-83872777 83872888
Email: aisikai@aisikai.cc
Fax: +86-514-83872000
LinkedIn: AISIKAI ELECTRIC
Website: www.aisikaigroup.com
Facebook: AISIKAI
Address: No.5 Chuangye Rd. , Industrial Zone, Chenji Town, Yizheng City, Jiangsu Province, China

JIANGSU AISIKAI ELECTRIC CO., LTD.

PRODUCTS CONTENTS

01	**ASKQ6 Series Intelligent Dual Power Automatic Transfer Switch**
01	Model Selection
02	Product Overview
03	Introduction To Performance Advantages
05	Structure Introduction Of J Basic Type
06	Structure Introduction Of X Fire-fighting Type
07	Function Code Table
08	Introduction To Electric/manual Operation
09	Main Technical Parameters
11	Outline And Installation Dimensions
13	Electrical Schematic Diagram

COMPANY PROFILE

Founded in 2007, Jiangsu AISIKAI Electric Co., Ltd. focuses on the R&D, manufacturing, and sales of high-quality low-voltage switching products. Our solutions cover primary, secondary, and tertiary power distribution applications.

AISIKAI is a National High-Tech Enterprise, certified to ISO 9001, with products compliant with CE and CCC standards. We are also an SGS-audited qualified supplier. The company holds multiple invention and utility model patents and was recognized as a Yangzhou Engineering Technology Center and a national standards-adopting enterprise.

Driven by Quality, Service, Integrity, and Innovation, AISIKAI continuously improves from the customer's perspective—delivering reliable products and practical solutions for modern power distribution.

AISIKAI, POWER THE FUTURE.



ASKQ6 SERIES INTELLIGENT AUTOMATIC TRANSFER SWITCH

MODEL SELECTION

ASK	Q	6	—	63A	/	4P	/	J
Company: AISIKAI ELECTRIC	TYPE: Class PC Solenoid Type	Design code		Rated current **In(A)**: 63, 80, 100, 125, 140, 150, 160, 200, 225, 250, 400, 630		Number of poles: 2P: 2 poles; 3P: 3 poles; 4P: 4 poles		Function: J: Basic type (2-position); X: Fire-fighting type (3-position)

DESCRIPTION:

1, Function Difference:

J: basic type, there is no internal controller, the transfeming control signal is provided by the external controller installed by the customer himself, and the mechanical structure of the product is 2-position.

X: fire-fighting type, there is no internal controller, the transferring control signal is provided by the external controller installed by the customer; and the mechanical structure of the product is 3-position.

2, Mechanical Structure Difference:

2-position: only have 2 mechanical positions: Main and Standby, there is no safety ZERO(0) position.

3-position: have 3 mechanical positions: Main, Standby and safety ZERO(0) position, with higher safety level.

Design marking



Model description 1:

ASKQ6-400A/4P/J:
1. Solenoid type automatic transfer switch
2. Rated working current 400A
3. 4 poles
4. Basic type, 2-position structure

Model description 2:

ASKQ6-125A/4P/X:
1. Solenoid type automatic transfer switch
2. Rated working current 125A
3. 4 poles
4. Fire-fighting type, 3-position structure

CERTIFICATES










PRODUCT OVERVIEW

The new ASKQ6 series ATS carries on the family design DNA of the AISIKAI brand, featuring a refined appearance and robust construction. It extensively uses high-strength, high-standard materials such as stainless steel, carbon steel, and silicon steel, comprehensively enhancing structural strength and reliability. The product retains the iconic externally-actuated contact structure design, with independent upper and lower arc-quenching chambers that effectively isolate arcs, improving breaking safety. The entire series meets the AC-33A utilization category standard, making it suitable for complex load application scenarios.

The product boasts a fast switching speed at the millisecond level, with a mechanical life of no less than 20,000 operations and an electrical life of no less than 10,000 operations, ensuring durability and reliability. It offers four frame sizes and seven current specifications, fully covering household, commercial, and industrial application scenarios to meet diverse power switching needs.

It is mainly designed for Class I loads as stipulated by national regulations, and is widely applicable to critical power supply points in firefighting, post and telecommunications, hospitals, hotels, high-rise buildings, industrial production lines, and television stations. The main and standby power sources can be grid-to-grid, automatically started generator sets, battery banks, etc.

Standards Complied

GB14048.1	General Provision
GB/T14048. 11	Automatic Transfer Switching Equipment
IEC60947-1	General Provision
IEC60947-6-1	Automatic Transfer Switching Equipment

Pollution Level

- ASKQ6 series switches are certified to be operated in pollution level 3 environments
- Pollution level specified for the applicable environment of industrial electrical equipment in the GB14048 standard

Electromagnetic Compatibility

Electrostatic discharge	LEVEL 4
Electrical fast transient pulse group	LEVEL 4
Radio frequency radiation disturbance	LEVEL 3
Radio frequency conducted disturbance	LEVEL 3
Surge	LEVEL 4

Category Of Use

- AC-33A

Electrical Class

- PC Class (according to GB/T14048.11 and IEC60947-6-1)

APPLICATION



NORMAL WORKING CONDITIONS AND INSTALLATION METHODS

Items	Requirements
Operating temperature	-20 to 40℃. The average value for 24 hours shall not exceed +35℃;
Operating humidity	The average humidity at +40℃ shall not exceed 50%. Higher relative humidity is allowed at lower temperatures, for example, up to 90% at+25℃. Special measures should be taken for occasional condensation due to temperature changes;
Altitude	Lower than 2000 meters and, if higher than 2000 meters, please use at reduced ratings;
Vibration and gas	There shall be no strong vibration or shock and no harmful gases to corrode the metals and to damage the insulation within the environment of its use;
Surrounding material	There shall be no serious dust, conductive particles or explosive hazardous substances;
Pollution level	Level 3 according to GB/T14048.11
Class of installation	Class IV according to GB/T14048.11
Installation inclination	The product is fixedly installed in the cabinet, the maximum inclination is +22.5;
Arcing distance	AC 380V,arcing distance is 80mm; flashover 660v, arcing distance is 100mm.

PERFORMANCE ADVANTAGES

3-position or 2-position optional

- Same current frame is available in 3-position or
  2-position
  2-position for end type
  3-position for fire-fighting ZERO position
- 2-position: two positions for main and standby power supply
  1.Fire-fighting loads (e.g., fire pumps, exhaust/smoke exhaust fans, etc.)
  2.Emergency loads and loads sensitive to power failure time
- 3-position: main power position, standby power position, open position
  1.Fire-fighting forced cut off
  2.High inductive or capacitive loads (high power motors, capacitors)

Closed position indication

- Close and Open Indicator Window
  Indicator mechanical interlock
  Close and Open status with color differentiation

Modular design of position feedback signal

- Convenient wiring;

Integrated circuit protection in the control unit

Maximum current up to 10A

Prevents faults caused by overcurrent or misoperation

Dedicated dual-power integrated design

- The moving contacts adopt outward snap-action design
  Equipped with built-in mechanical interlock
  The two power supplies will not be connected simultaneously
  Reliable mechanical latch

Integrated design of arc-quenching chamber

- The moving contacts are arranged bilaterally
  Arc-quenching chamber installed on both sides
  Independent arc-dissipating channel
  Ensure the reliability of the contact system and extend the service life
  Adopts a horizontal-slot metal grid structure
  The stepped layout enables rapid arc extinction
  Reduces arc energy

High rated conditional short-circuit current capacity

●The rated conditional short-circuit current is a measure of the carrying capacity of the ATSE to withstand a fault current in the event of an overload or short-circuit in the system.

Specification	Standard	Fuse protection Rated conditional short-circuit current Iq(kA)
ASKQ6-160~250A	GB/T14048.11	100
ASKQ6-400~630A	GB/T14048.11	120

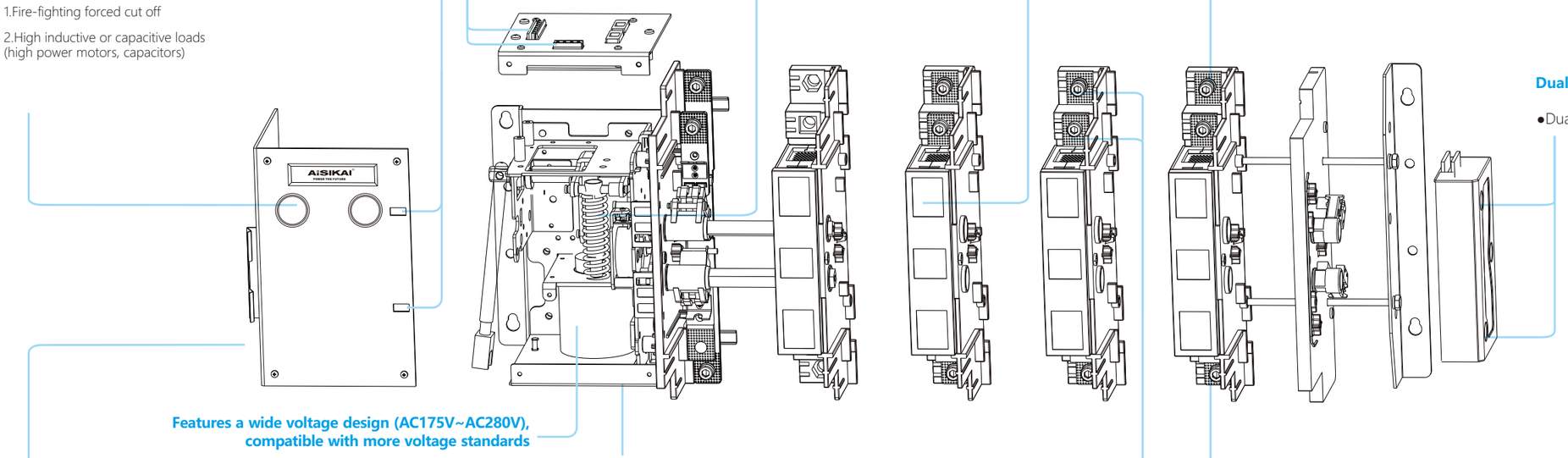

Dual position feedback

●Dual position feedback as standard for main/standby power supply

Features a wide voltage design (AC175V~AC280V), compatible with more voltage standards

AC-33A High-level use category

●GB/T 31142-2014 "Transfer Switch Equipment (TSE) Selection and Use Guidelines" 8.4: According to the nature of the load to select the TSE principle, it is clearly stated that the use of the ATSE category should be corresponding to the nature of the load (Fire-fighting pump loads correspond to the use of the category of AC-33, taking into account the requirements of the daily inspection, it is appropriate to use the AC-33A)

●Can be used in harsh electrical environments

Service life test conditions			
Test condition	AC-33A	AC-33iA	AC-33B
I/Ie	2/1	2/1	1
Ur/Ue	1.05	1.05	1.05
Power factor	0.8	0.8	0.8
Power-on time	50ms	50ms	50ms
Number of operation cycles	3000/3000	3000/3000	1000

Maximum allowed power failure time of load	Typical loads	ATSE rating total action time	Workplaces
≤0.1s	Financial Construction Cash Counter	0.1 level	Automated Teller Machine (ATM) vaults
≤0.15s	Class 0.15 emergency power supply	0.15 level	Medical resuscitation equipment ICU
≤0.25s	High hazard area lighting systems Emergency switchover for use	0.25 level	Hospital operating room lighting
≤0.5s	Medical facilities and primary loads with particularly important equipment	0.5 level	High-rise buildings
	Class 0.5 emergency power supply		
	Safety lighting		

70ms fast changeover speed

●Solenoid drive, Contact changeover time ≤ 70ms.

●Wide range of applications, suitable for medical facilities, security level semergency lighting and other important places.

Reduce installation costs

- The inlet and outlet wiring methods are fexible and diverse, supporting six wiring forms in total: top in and bottom out, bottom in and top out, top-top in and bottom out, and bottom-bottom in and top out

Convenient wiring

Wide compatibility

Save wiring materials

Making and breaking capacity: 10Ie

●Making and breaking capacity reaches 10 times of the rated current, 50 times cycles of operation

Service life test conditions			
Test condition	AC-33A	AC-33iA	AC-33B
I/Ie	10	6	10
Ur/Ue	1.05	1.05	1.05
Power factor	0.35	0.5	0.35
Power-on time	50ms	50ms	50ms
Number of operation cycles	50	50	5

STRUCTURE OF J BASIC TYPE

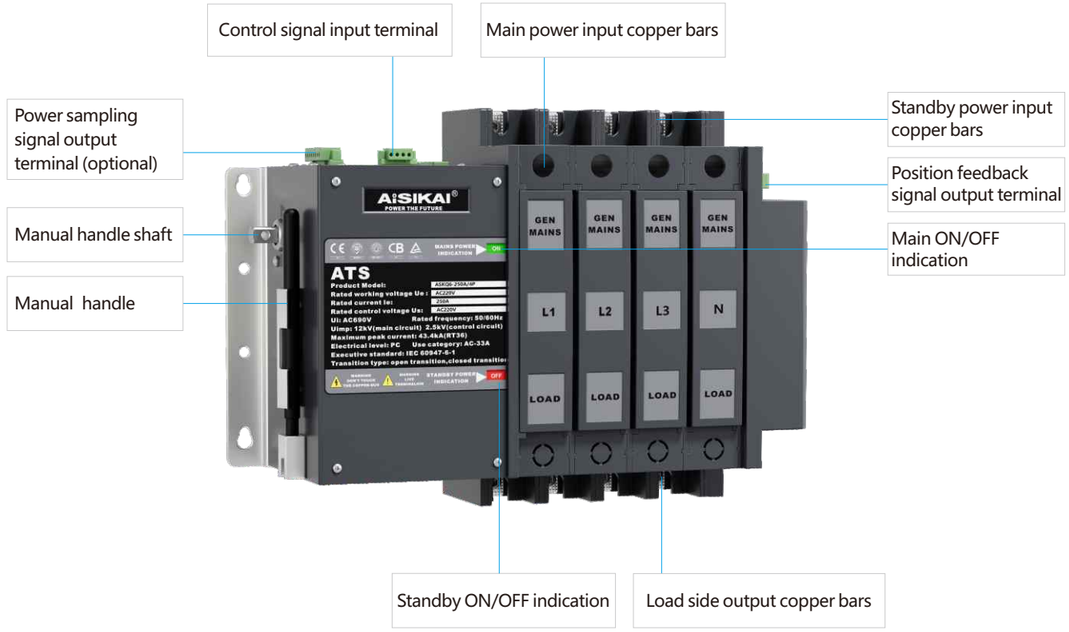

Internal Schematic

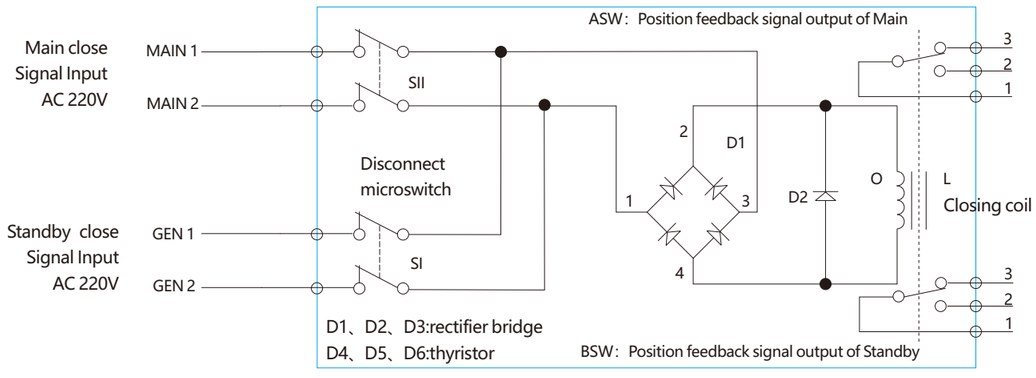

STRUCTURE OF X FIRE-FIGHTING TYPE

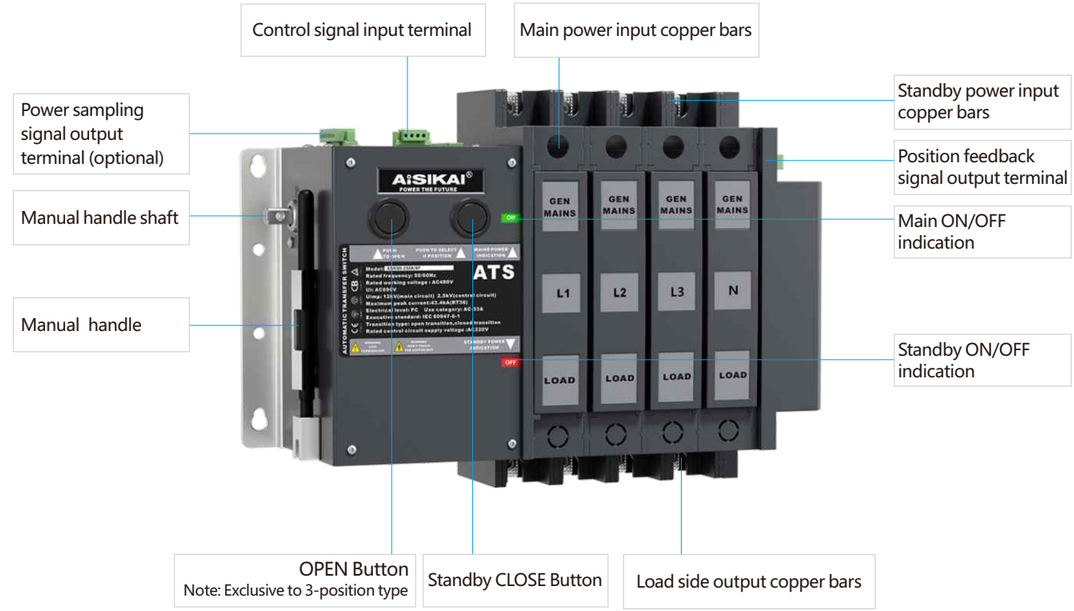

Internal Schematic

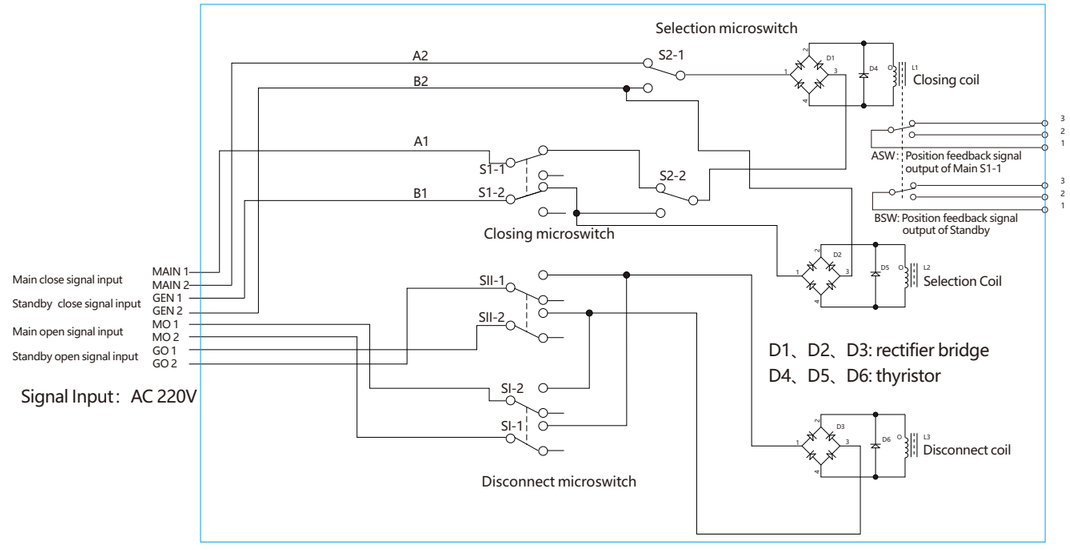

FUNCTION CODE TABLE

Application Type	Basic	Fire Fighting
Function code	J	X
Structure		
Electrical 2-position	Y	
Manual 2-position	Y	
Electrical 3-position		Y
Manual 3-position		Y
Control method		
Remote electric control (external controller)	Y	Y
Emergency manual	Y	Y
Application function		
Auto-switch with Auto-recovery	External control	External control
Auto-switch without Auto-recovery	External control	External control
Main power is prior	External control	External control
Standby power is prior	External control	External control
Power fail delay setting	External control	External control
Power restoration delay setting	External control	External control
Feedback signal	Dry contact(Ⅰ、Ⅱ)	Dry contact(Ⅰ,Ⅱ,0)
Display function		
Switch position status display	External Indicator Light	External Indicator Light

Note: Y indicates that this feature is available.

INTRODUCTION TO ELECTRIC OPERATION

J Basic (two-position type)

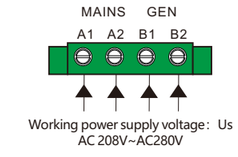

Control signal input terminal

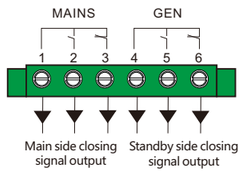

Position feedback signal output terminal

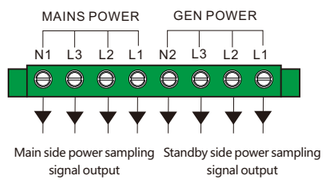

Power sampling signal output terminal (optional)

X Fire-fighting(three-position type)

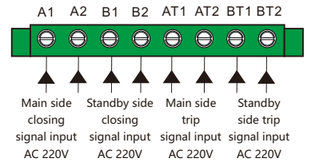

Control signal input terminal

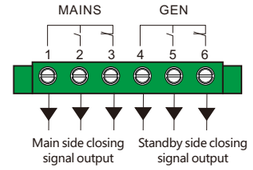

Position feedback signal output terminal

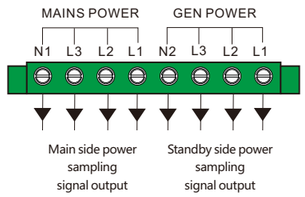

Power sampling signal output terminal (optional)

INTRODUCTION TO MANUAL OPERATION

J Basic Type (two-position) Manual Operation Instructions

To close the Main, turn the handle downwards to the limit position in the direction indicated by the arrow.

To close Standby,when in the state of Main closed, pull the handle back to the positioning position in the direction indicated by the arrow.

Note: Manual operation with load is prohibited. The controller must be in manual or disconnected state during manual operation. Each time the manual handle is turned, the switch changes position once.

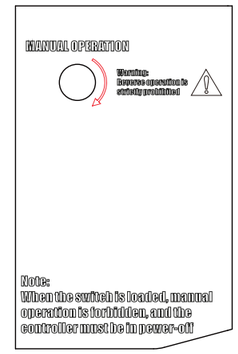

X Fire-fighting Type (three-position) Manual Operation Instructions

To close Main, press the “OPEN” button to make the switch at 0 position. Turn the handle upwards to the limit position in the direction indicated by the arrow.

To close Standby, press the “OPEN” button to make the switch at 0 position. Then press and hold the “STANDBY II CLOSE” while simultaneously turn the handle upwards to the limit position in the direction indicated by the arrow.

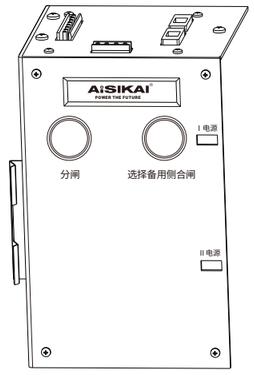

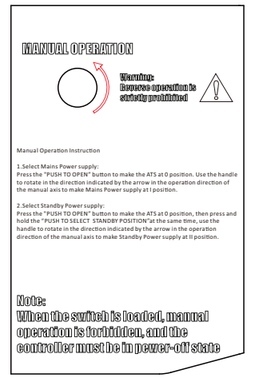

⚠
Note: ASKQ6 can be operated electrically and manually. When operated electrically, its effective breaking and closing capability can be ensured. However, when operated manually, there may be differences in the speed of breaking and closing due to human factors, which cannot guarantee reliable breaking and closing capability. Therefore, manual operation during the on-load switching will cause excessive wear on the silver alloy contacts. As a result, manual operation is only allowed for inspection, maintenance of the operating mechanism and contacts, and in case of malfunction of electric operation or emergency.

MAIN TECHNICAL PARAMETERS

ASKQ6 Dual Power Automatic Transfer Switch								
Frame	160F		250F		400F		630F	
Rated current **Ie(A)**	63、80、100、125、140、150、160		160、180、200、225、250		250、315、350、400		400、500、630	
Standards complied	IEC69047-6-1							
Rated frequency **(Hz)**	50/60		50/60		50/60		50/60	
Poles **(P)**	2	3,4	2	3,4	2	3,4	2	3,4
Rated operating voltage **Ue(v)AC**	230	400	230	400	230	400	230	400
Control voltage (V) AC	230		230		230		230	
Rated insulation voltage **Ui(v)AC**	1000 (main circuit); 500V (auxiliary circuit, control circuit)							
Rated impulse withstand voltage **Uimp(kV)**	8		8		8		8	
Rated conditional short-circuit current **Iq** (fuse protection) **(kA)**	100		100		120		120	
Rated conditional short-circuit current **Iq** (Circuit breaker protection) **(kA)**	50		50		65		65	
Rated short-time withstand current **Icw(kA/s)**	10kA/60ms		10kA/60ms		17kA/100ms		17kA/100ms	
Rated short-circuit making capacity **Icm(kA)**	17		17		34		34	
Category of use	AC-33A		AC-33A		AC-33A		AC-33A	
Mechanical life **(times)**	10000		10000		10000		10000	
Electrical life **(times)**	6000		6000		6000		6000	
Number of operating cycles **(times/h)**	120		120		120		120	
Contact switching time **(ms)**≤	70 (Type J) / 200 (Type X)		70 (Type J) / 200 (Type X)		70 (Type J) / 200 (Type X)		70 (Type J) / 200 (Type X)	
Electrical class	PC							

OUTILINE AND INSTALLATION DIMENSIONS

ASKQ6-160A-Type J (two- position) / Type X (three- position)

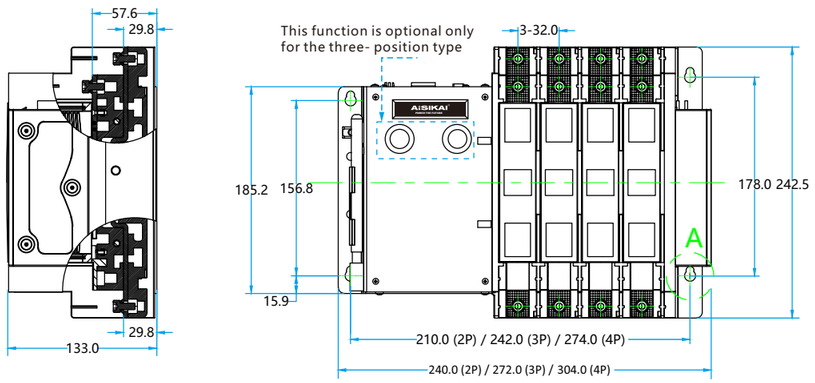

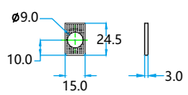

Copper bar
dimension drawing

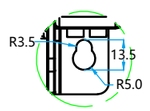

Part A
Scale: 2:1

ASKQ6-250A-Type J (two- position) / Type X (three- position)

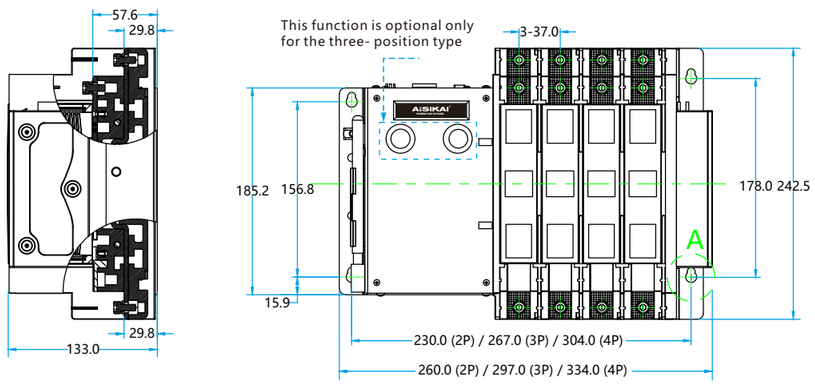

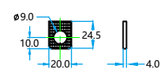

Copper bar
dimension drawing

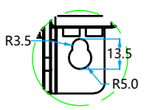

Part A
Scale: 2:1

ASKQ6-400A-Type J (two- position) / Type X (three- position)

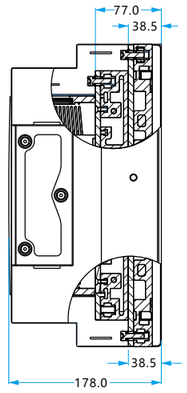

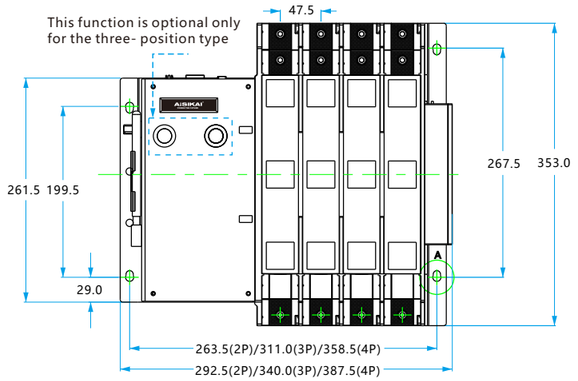

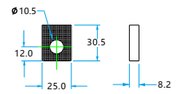

Copper bar
dimension drawing

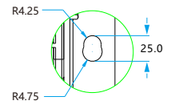

Part A
Scale: 2:1

ASKQ6-630A-Type J (two- position) / Type X (three- position)

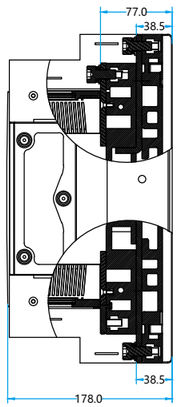

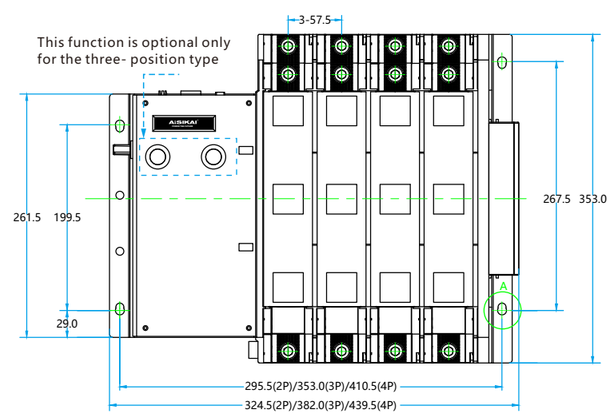

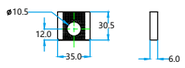

Copper bar
dimension drawing

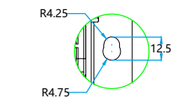

Part A
Scale: 2:1

Electrical schematic diagram: ASKQ6-J basic type & SKR2-AJC (two- position) controller

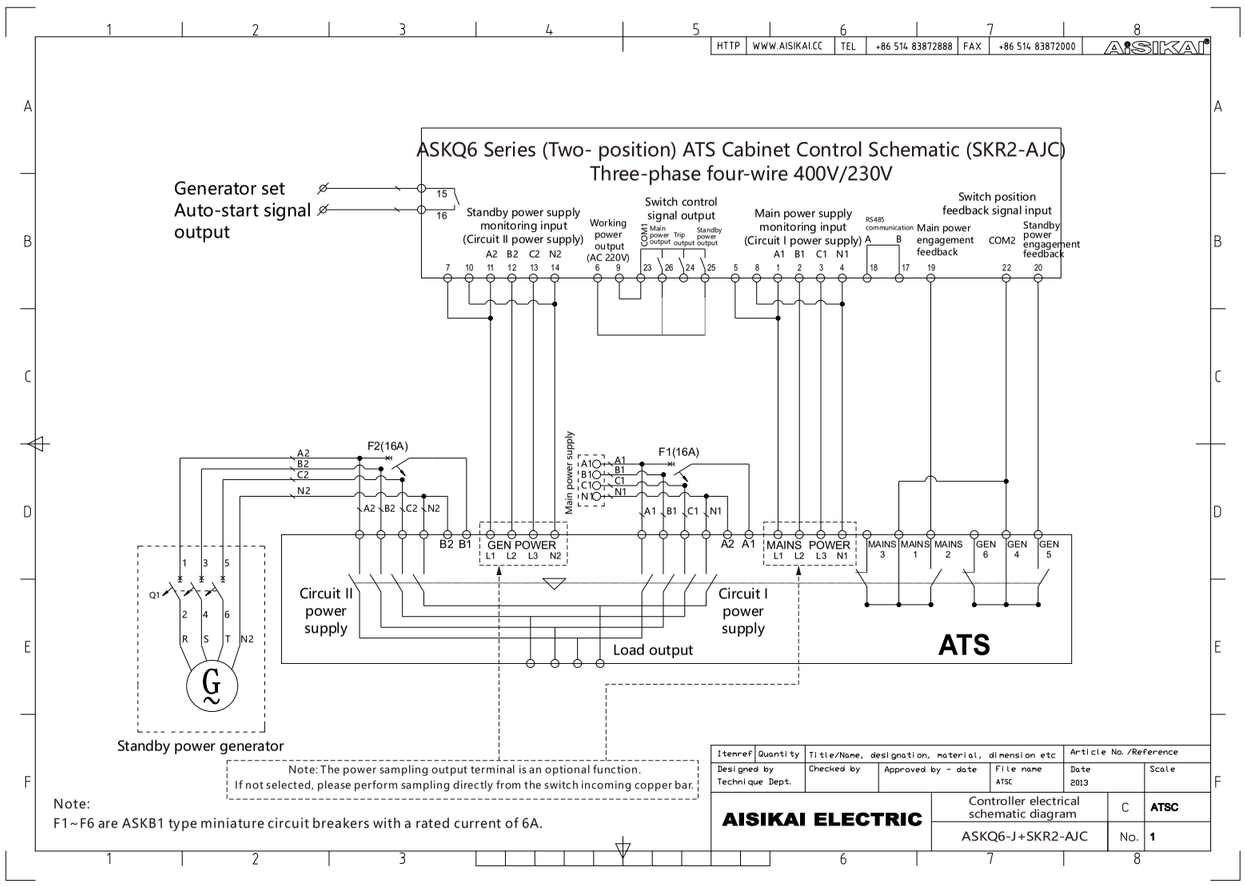

Electrical schematic diagram: ASKQ6-X fire-fighting type & SKR2-AXC (three- position) controller

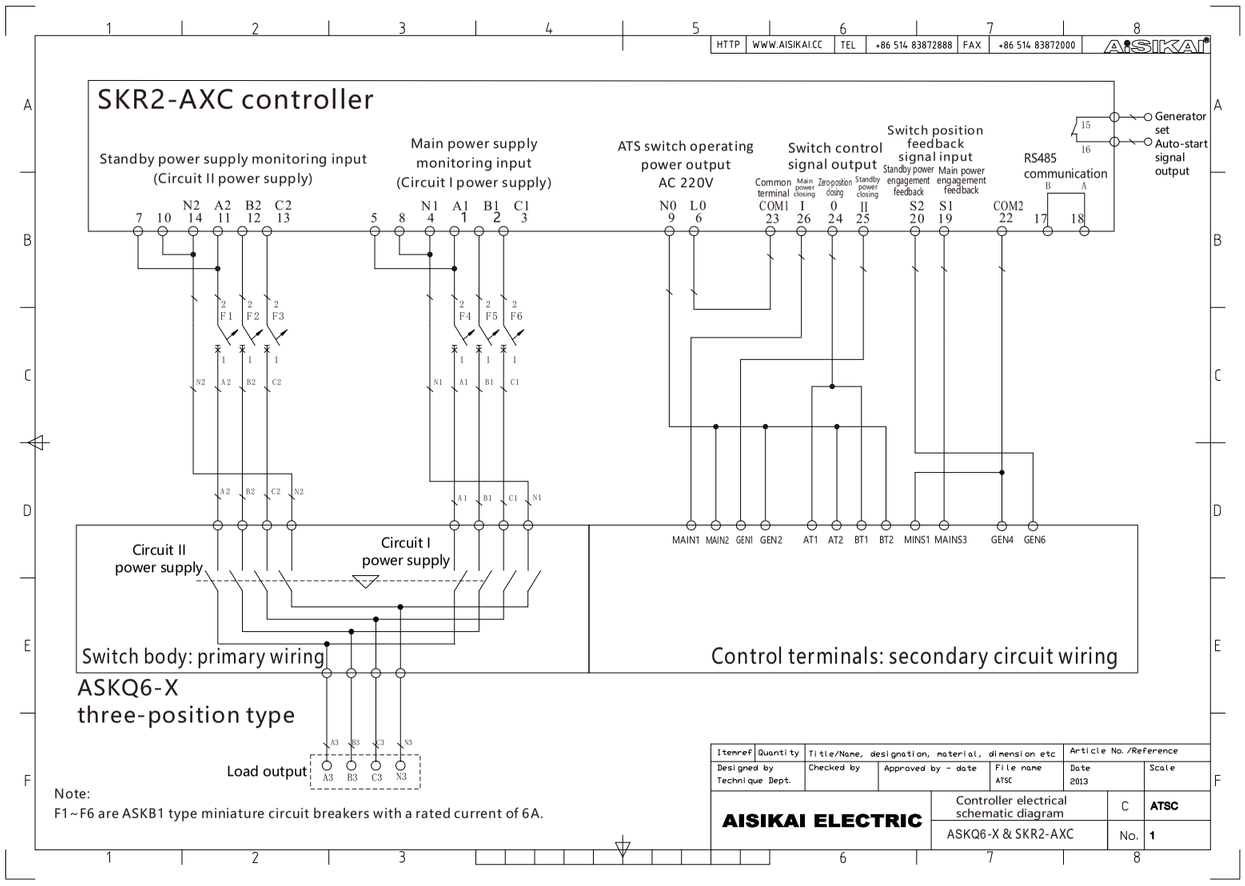

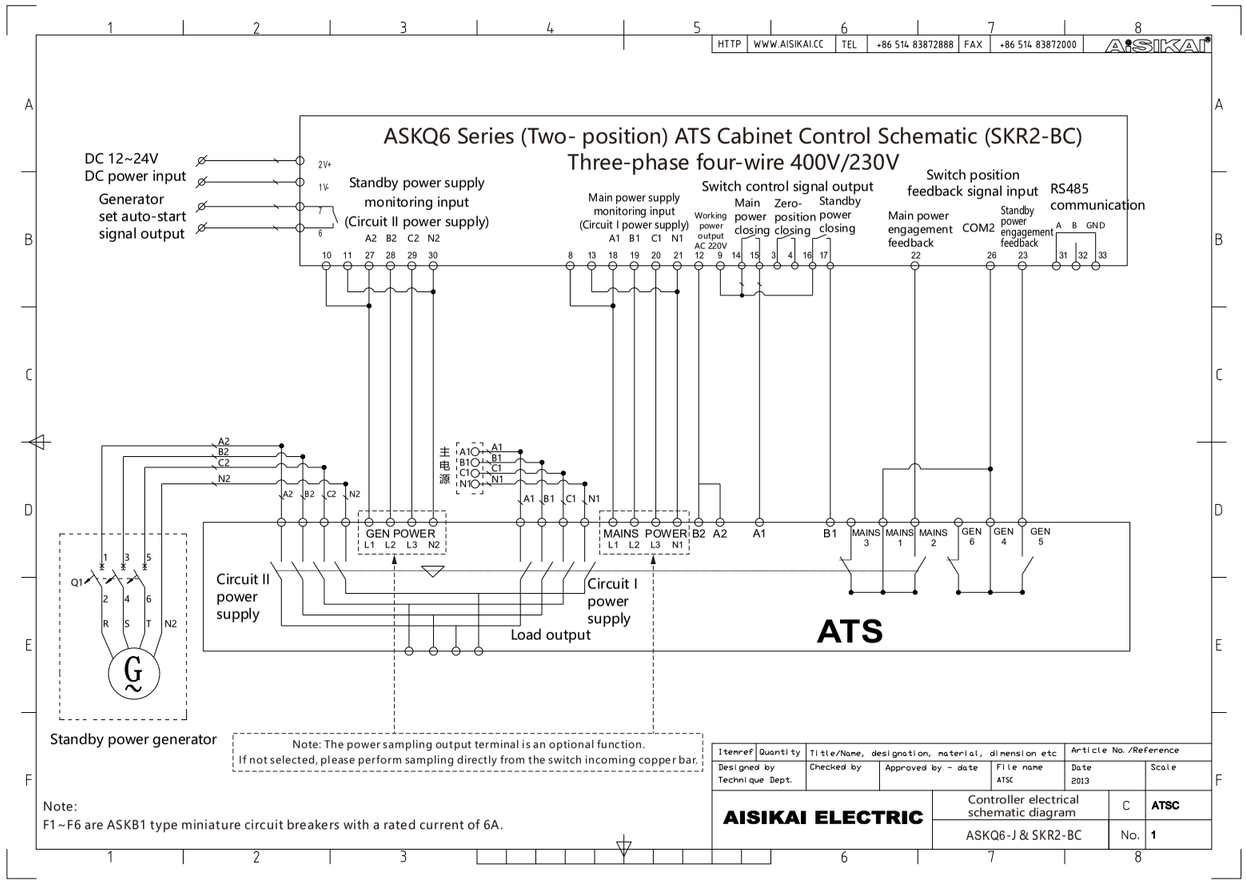
HTTP WWW.AISIKAI.CC TEL +86 514 83872888 FAX +86 514 83872000 AISIKAI
ASKQ6 Series (Two- position) ATS Cabinet Control Schematic (SKR2-BC)
Three-phase four-wire 400V/230V
DC 12~24V
DC power input
Generator
set auto-start
signal output
Standby power supply
monitoring input
(Circuit II power supply)
Main power supply
monitoring input
(Circuit I power supply)
Switch control signal output
Working power output AC 220V
Main power closing
Zero-position closing
Standby power closing
Switch position feedback signal input
Main power engagement feedback
COM2
Standby power engagement feedback
RS485 communication
A B GND
GEN POWER
MAINS POWER
Circuit II power supply
Circuit I power supply
Load output
ATS
Standby power generator
Note: The power sampling output terminal is an optional function.
If not selected, please perform sampling directly from the switch incoming copper bar.
Note:
F1~F6 are ASKB1 type miniature circuit breakers with a rated current of 6A.
Itemref Quantity Title/Name, designation, material, dimension etc Article No./Reference
Designed by Technique Dept.
Checked by
Approved by - date
File name ATSC
Date 2013
Scale
AISIKAI ELECTRIC
Controller electrical schematic diagram
C ATSC
ASKQ6-J & SKR2-BC
No. 1

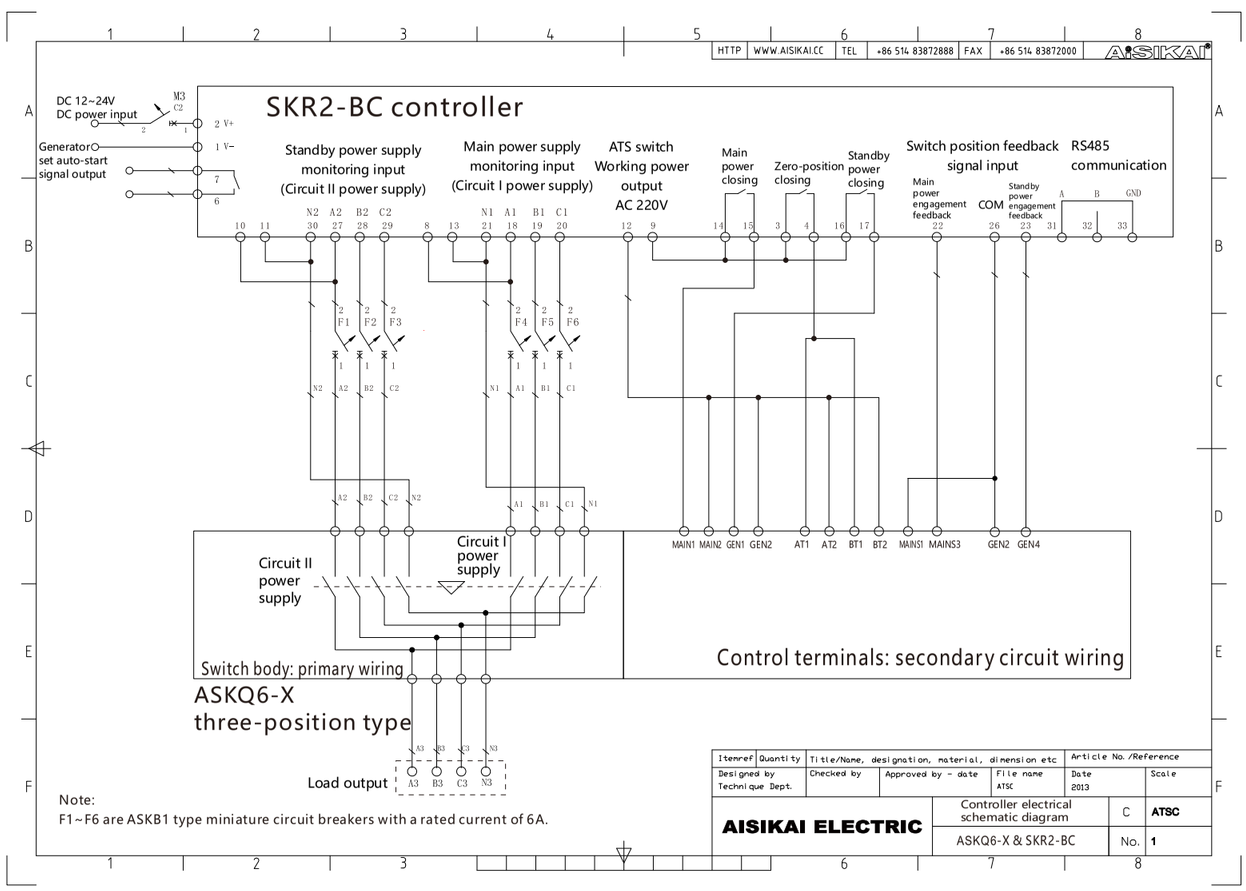
HTTP WWW.AISIKAI.CC TEL +86 514 83872888 FAX +86 514 83872000 AISIKAI
SKR2-BC controller
DC 12~24V
DC power input
Generator
set auto-start
signal output
Standby power supply
monitoring input
(Circuit II power supply)
Main power supply
monitoring input
(Circuit I power supply)
ATS switch
Working power
output
AC 220V
Main power closing
Zero-position closing
Standby power closing
Switch position feedback signal input
Main power engagement feedback
COM
Standby power engagement feedback
RS485 communication
A B GND
Circuit II power supply
Circuit I power supply
Switch body: primary wiring
Control terminals: secondary circuit wiring
ASKQ6-X
three-position type
Load output
Note:
F1~F6 are ASKB1 type miniature circuit breakers with a rated current of 6A.
Itemref Quantity Title/Name, designation, material, dimension etc Article No./Reference
Designed by Technique Dept.
Checked by
Approved by - date
File name ATSC
Date 2013
Scale
AISIKAI ELECTRIC
Controller electrical schematic diagram
C ATSC
ASKQ6-X & SKR2-BC
No. 1