AiSIKAI®
POWER THE FUTURE

AUTOMATIC TRANSFER SWITCH
TRANSFERENCIA AUTOMÁTICA
INTERRUPTORES CONMUTADORES AUTOMÁTICOS

ASKQ2 SERIES ATS OPERATION MANUAL

PRODUCT OVERVIEW

The ASKQ2 series dual power automatic transfer switch, a specialized PC-grade power product developed and manufactured by our company, is designed for reliable switching between two power sources in 50/60Hz 16A-1600A low-voltage AC distribution systems. This switch offers three operation modes: fully automatic, electrically operated, and emergency manual. It complies fully with national standards, has obtained mandatory CCC safety certification, integrates switch and logic control for electromechanical integration, ensuring high reliability of switching and comprehensive protection functions.

It is suitable for critical facilities such as high-rise buildings, shopping malls, banks, hospitals, telecommunications, coal mines, ships, industrial assembly lines, civil defense, chemical, metallurgical, and military installations where uninterrupted power supply is essential. The switch has mechanical and electrical interlocking mechanisms. The NAJ intelligent fire-fighting type supports automatic switch and automatic restore, automatic switch without automatic restore, voltage-loss protection, under-voltage protection, phase-loss protection, and manual/automatic switching. The switching time of the switch body is less than 80ms. The intelligent controller allows adjustable delay from 0 to 30 seconds to accommodate specific operational needs.

Main Technical Parameters

Model		125F			400F				1250F								1600F	
Rated operating current(**A**)		16,20,25,32,40,50,63,80, 100,125			160,180,200,225,250, 315,400				630		800		1000		1250		1600	
Category of use		AC-33iB			AC-33iB				AC-33iB								AC-33iB	
Rated short-time withstand current(**kA**)		20			25				35								35	
Rated impulse withstand voltage(**kV**)		8			8				8								8	
Service life	Mechanical	8000			8000				3000								3000	
	Electrical	3000			3000				1000								1000	
Poles		2P	3P	4P	3P	4P	3P	4P	3P	4P	3P	4P	3P	4P	3P	4P	3P	4P
Weights(**kg**)		4	4.5	5.5	18	19	18.5	20.5	37	42.5	39	46	41	48	48	57	56	67
Operation cycle (**sec/time**)		10			15				18		20		25		25		30	

Normal Operating Conditions And Installation Methods

Item	Requirements
Temp	−5 to +40°C, 24h average not to exceed +35°C;
Humidity level	The average humidity does not exceed 50% at +40°C. Higher relative humidity may be permitted at lower temperatures, e.g. up to 90% at +25°C. Special measures should be taken for occasional condensation due to temperature changes.
Altitude	Less than 2,000 meters, over 2,000 meters please reduce the rating to use;
Vibration and gas	The use of the environment without strong vibration and shock, no corrosion of metals and damage to the insulation of harmful gases;
Surrounding materials	Free of heavy dust, conductive particles and explosive hazardous substances;
Contamination level	Conforms to the pollution level 3 specified in GB/T14048.11.
Installation category	Conforms to the installation category III specified in GB/T14048.11.
Installation	Vertically mounted in control cabinets and distribution cabinets.

Secondary Circuit Wiring Diagram

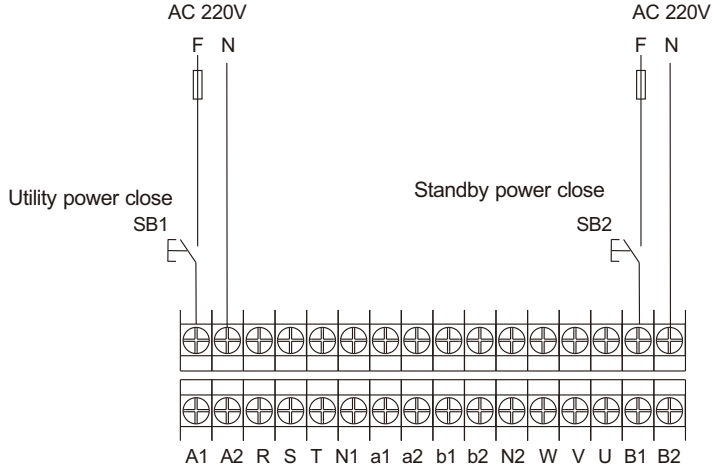

A1, A2 = Main closing signal input terminals;
R, S, T, N1: Main power supply voltage sampling output terminals;
a1, a2: Main closing feedback signal output terminals;
B1, B2 = Standby closing signal input terminals
U, V, W, N2: Standby power supply voltage sampling output terminals;
b1, b2: Standby side closing feedback signal output terminals;

Outline And Mounting Dimensions

Frame:125F
Rated current: 40A~125A

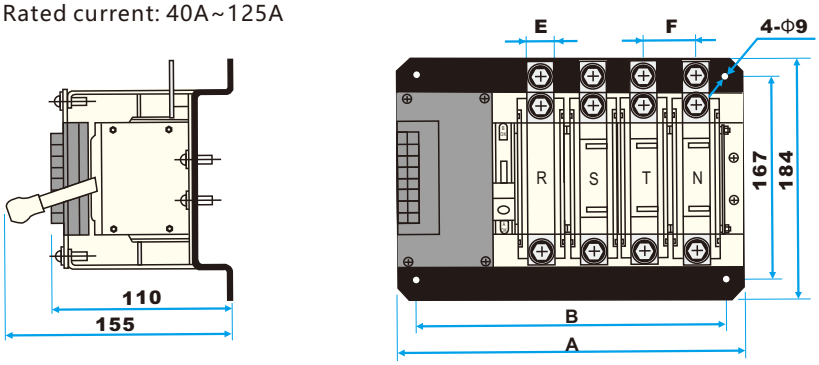

Code	Poles	ASKQ2-125
A	2P	191
	3P	228
	4P	265
B	2P	171
	3P	208
	4P	245
E		20
F		37

Frame:400F
Rated current: 160A~400A

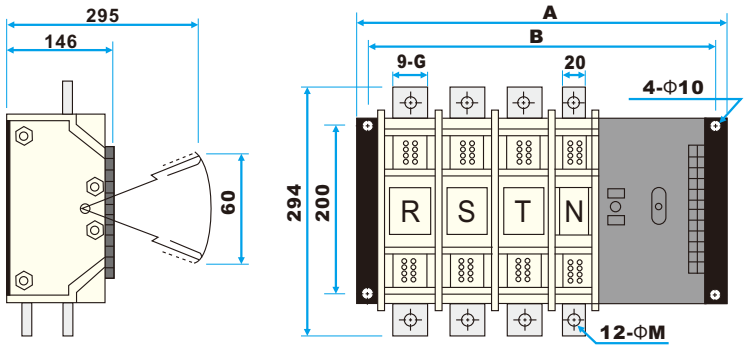

Code	Poles	160A/250A	400A			
A	3P	322	352			
	4P	372	402			
B	3P	302	332			
	4P	352	382			
G		20	30			
E		8	10			
F	4P	49	3P	59	4P	54

Frame:1250F &1600F
Rated current: 630A~1250A &1600A

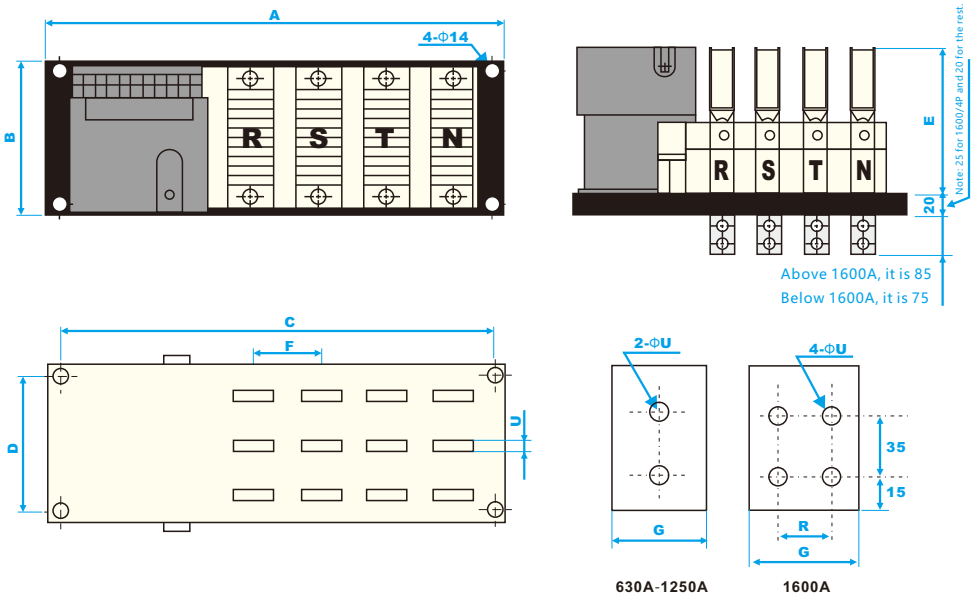

Code	Poles	ASKQ-630	ASKQ-800	ASKQ-1000	ASKQ-1250	ASKQ-1600
A	3P					700
	4P					750
C	3P					665
	4P					710
B						
D						
E						
F		90	90	90	90	160
G		30	40	45	55	75
R						60
U		12				14